AKAI SERVICE MANUAL

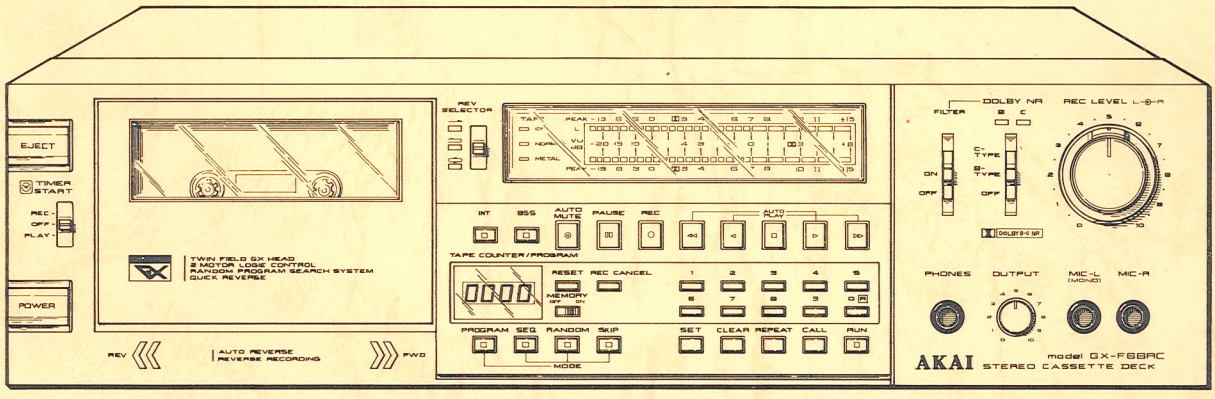

STEREO CASSETTE DECK

MODEL GX-F66RC

STEREO CASSETTE DECK

MODEL GX-F66RC

THIS MANUAL IS APPLICABLE TO BOTH SILVER AND PEARL SHADOW PANEL MODELS

SECTION 1 SERVICE MANUAL 3
SECTION 2 PARTS LIST 19
SECTION 3 SCHEMATIC DIAGRAM 32

SAFETY INSTRUCTIONS

SAFETY CHECK AFTER SERVICING

Confirm the specified insulation resistance between power cord plug prongs and externally exposed parts of the set is greater than 10 Mohms, but for equipment with external antenna terminals (tuner, receiver, etc.) and is intended for [C] or [A], specified insulation resistance should be more than 2.2 Mohms (ground terminals, microphone jacks, headphone jacks. line-in-out jacks etc.)

PRECAUTIONS DURING SERVICING

1. Parts identified by the ⚠ symbol parts are critical for safety.
   Replace only with parts number specified.
2. In addition to safety, other parts and assemblies are specified for conformance with such regulations as those applying to spurious radiation. These must also be replaced only with specified replacements.
   Examples: RF converters, tuner units, antenna selector switches, RF cables, noise blocking capacitors, noise blocking filters, etc.
3. Use specified internal wiring. Note especially:
   1) Wires covered with PVC tubing
   2) Double insulated wires
   3) High voltage leads
4. Use specified insulating materials for hazardous live parts. Note especially:
   1) Insulation Tape
   2) PVC tubing
   3) Spacers (Insulating Barriers)
   4) Insulation sheets for transistors
5. When replacing AC primary side components (transformers, power cords, noise blocking capacitors, etc.), wrap ends of wires securely about the terminals before soldering.

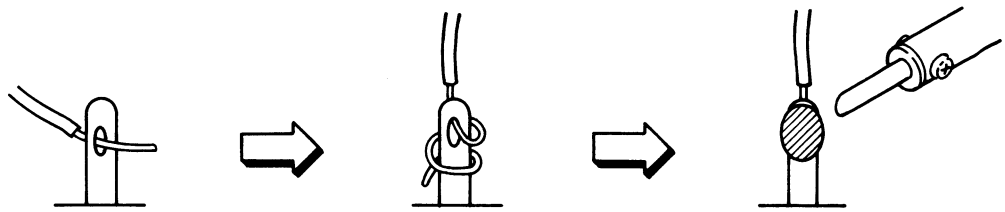

6. Observe that wires do not contact heat producing parts (heatsinks, oxide metal film resistors, fusible resistors, etc.).
7. Check that replaced wires do not contact sharp edged or pointed parts.
8. Also check areas surrounding repaired locations.
9. Use care that foreign objects (screws, solder droplets, etc.) do not remain inside the set.

SECTION 1

SERVICE MANUAL

TABLE OF CONTENTS

I. **SPECIFICATIONS** 4
II. **CONTROLS** 5
III. **PRINCIPAL PARTS LOCATION** 6
IV. **VOLTAGE AND CYCLE CONVERSION** 7
1. VOLTAGE CONVERSION 7
2. CYCLE CONVERSION 7
V. **MECHANICAL AND HEAD ADJUSTMENT** 8
VI. **ELECTRICAL ADJUSTMENT** 8
1. QUICK REVERSE SENSITIVITY ADJUSTMENT 8
2. PRE AMPLIFIER ADJUSTMENT 9
3. DOLBY ADJUSTMENT 10
VII. **CLASSIFICATION OF VARIOUS P.C BOARDS** 11
1. P.C BOARD TITLES AND IDENTIFICATION NUMBERS 11
2. COMPOSITION OF VARIOUS P.C BOARDS 12

For basic adjustments, measuring methods, and operating principles, refer to GENERAL TECHNICAL MANUAL

I . SPECIFICATIONS

TRACK SYSTEM	4 Track 2 Channel Stereo System
TAPE	Philips Type Cassette
TAPE SPEED	4.76 cm/s ±1.5% (1-7/8 ips. ±1.5%)
HEADS	Twin Field Super GX head for recording/playback x 1 Erase head x 2
MOTORS	Electronically speed controlled D.C. motor for capstan drive x 1 D.C. motor for reel drive x 1
WOW & FLUTTER	Less than 0.035% WRMS, 0.11% (DIN 45 500)
TAPE WINDING TIME	80 sec. using a C-60 cassette tape
FREQUENCY RESPONSE	Normal: 25 to 16,000 Hz±3 dB (–20 VU). CrO_2: 25 to 17,000 Hz±3 dB (–20 VU). 25 to 9,000 Hz±3 dB (0 VU). Metal: 25 to 19,000 Hz±3 dB (–20 VU). 25 to 13,000 Hz±3 dB (0 VU).
SIGNAL TO NOISE RATIO	Normal: Better than 58 dB CrO_2: Better than 60 dB Metal: Better than 60 dB (measured via tape with peak recording level) Dolby B-type NR switch ON: Improves up to 5 dB at 1 kHz, 10 dB above 5 kHz Dolby C-type NR switch ON: Improves up to 15 dB at 500 Hz, 20 dB at 1 kHz to 10 kHz
HARMONIC DISTORTION	Normal: Less than 0.8% CrO_2: Less than 0.7% Metal: Less than 0.7%
INPUT	MIC: 0.25 mV (input impedance 5.0 kohms) Required microphone impedance: 600 ohms Line: 70 mV (input impedance 47 kohms)
OUTPUT	Line: 410 mV at 0 VU Required load impedance: more than 20 kohms Phone: 1.3 mW/8 ohms at 0 VU
DIN	Input: 2.0 mV (input impedance 10 kohms) Output: 410 mV Required load impedance: more than 20 kohms
POWER CONSUMPTION	36 W
POWER REQUIREMENTS	100V, 50/60 Hz for Japan 120V, 60 Hz for USA and Canada 220V, 50 Hz for Europe except UK 240V, 50 Hz for UK and Australia 110V/120V/220V/240V, 50/60 Hz switchable for other countries.
DIMENSIONS	440(W) x 118(H) x 309(D) mm (17.3 x 4.6 x 12.2 inches)
WEIGHT	8.6 kg (19.0 lbs)

* For improvement purposes, specifications and design are subject to change without notice.
* "Dolby" and the Double D symbol are trademarks of Dolby Laboratories.
(Manufactured under license from Dolby Laboratories)

II. CONTROLS

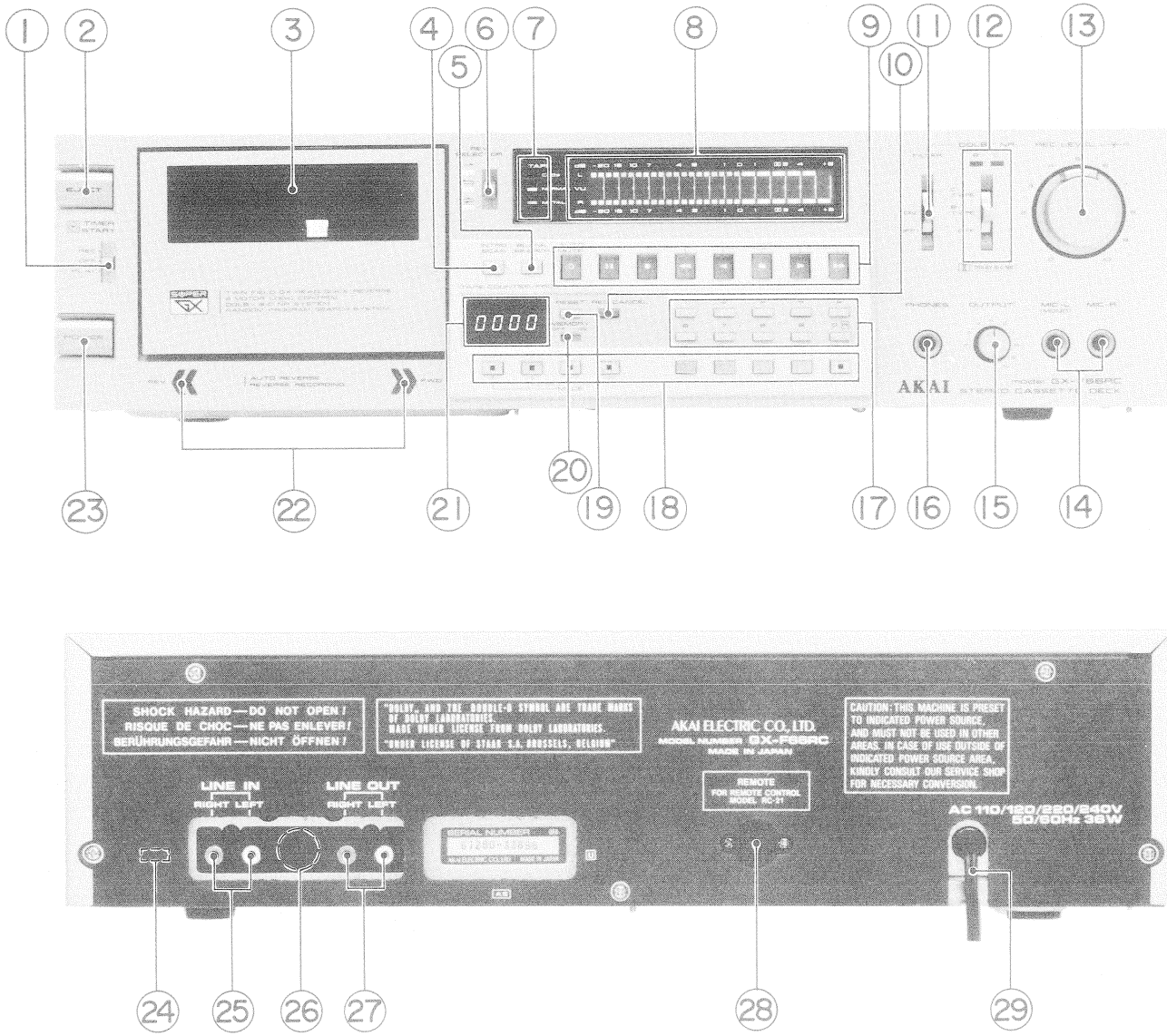

Fig. 1 Controls

1. TIMER START SELECTOR
2. EJECT BUTTON
3. CASSETTE RECEPTACLE
4. INTRO SCAN BUTTON
5. BLANK SEARCH BUTTON
6. REVERSE (REV) SELECTOR
7. TAPE INDICATORS
8. LED BAR METER WITH MAXIMUM HOLD
9. OPERATING BUTTONS
   AUTO MUTE (○) BUTTON
   PAUSE (II) BUTTON
   RECORDING [REC (●)] BUTTON
   REWIND (◀◀) BUTTON
   REVERSE (◀) BUTTON
   STOP (■) BUTTON
   FORWARD (▶) BUTTON
   FAST FORWARD (▶▶) BUTTON
10. RECORDING (REC) CANCEL BUTTON
11. FILTER SWITCH
12. DOLBY NR SELECTOR WITH INDICATORS
13. LEFT —•)— RIGHT RECORDING LEVEL CONTROLS (REC LEVEL L —•)— R)
14. MICROPHONE (MIC-L: LEFT, MIC-R: RIGHT) JACKS
15. OUTPUT CONTROL
16. HEADPHONE (PHONES) JACK
17. PROGRAMMING KEYS (1 TO 0 R)
18. RANDOM PROGRAM SEARCH SYSTEM (RPSS) KEYS
19. MEMORY SWITCH
20. RESET BUTTON
21. TAPE COUNTER/PROGRAM DISPLAY
22. DIRECTION INDICATORS
23. POWER SWITCH
24. LINE/DIN SELECTOR (SOME MODELS DO NOT HAVE THIS FACILITY.)
25. LINE IN JACKS (RIGHT AND LEFT)
26. DIN JACK (SOME MODELS DO NOT HAVE THIS FACILITY.)
27. LINE OUT JACKS (RIGHT AND LEFT)
28. REMOTE CONTROL JACK
29. POWER CORD (SOME MODELS ARE EQUIPPED WITH AN AC INLET INSTEAD. CONNECT WITH THE CONNECTION CORD SUPPLIED.)

III. PRINCIPAL PARTS LOCATION

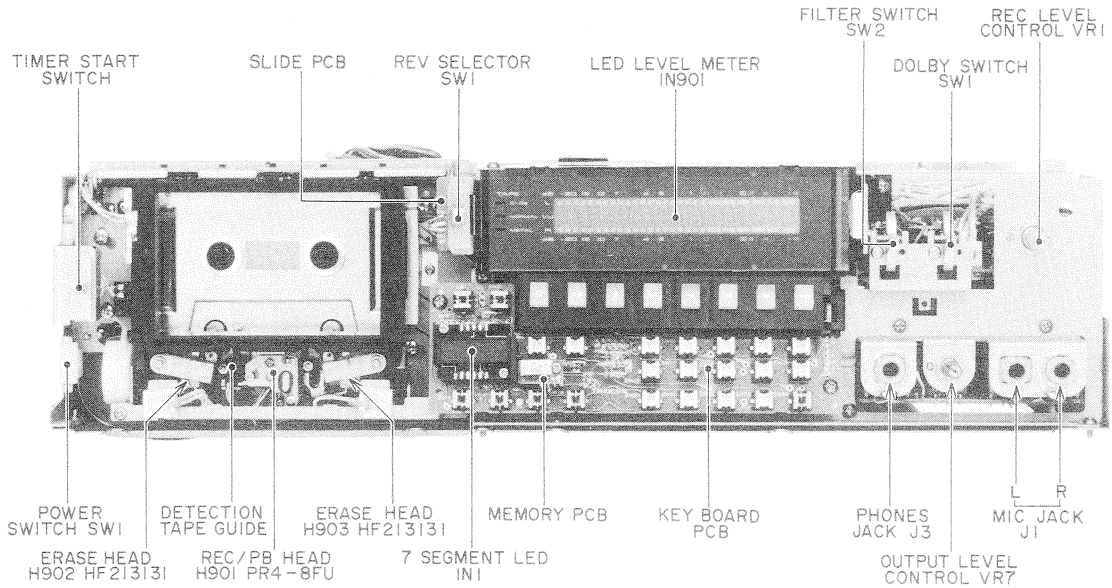

Fig. 2 Front View

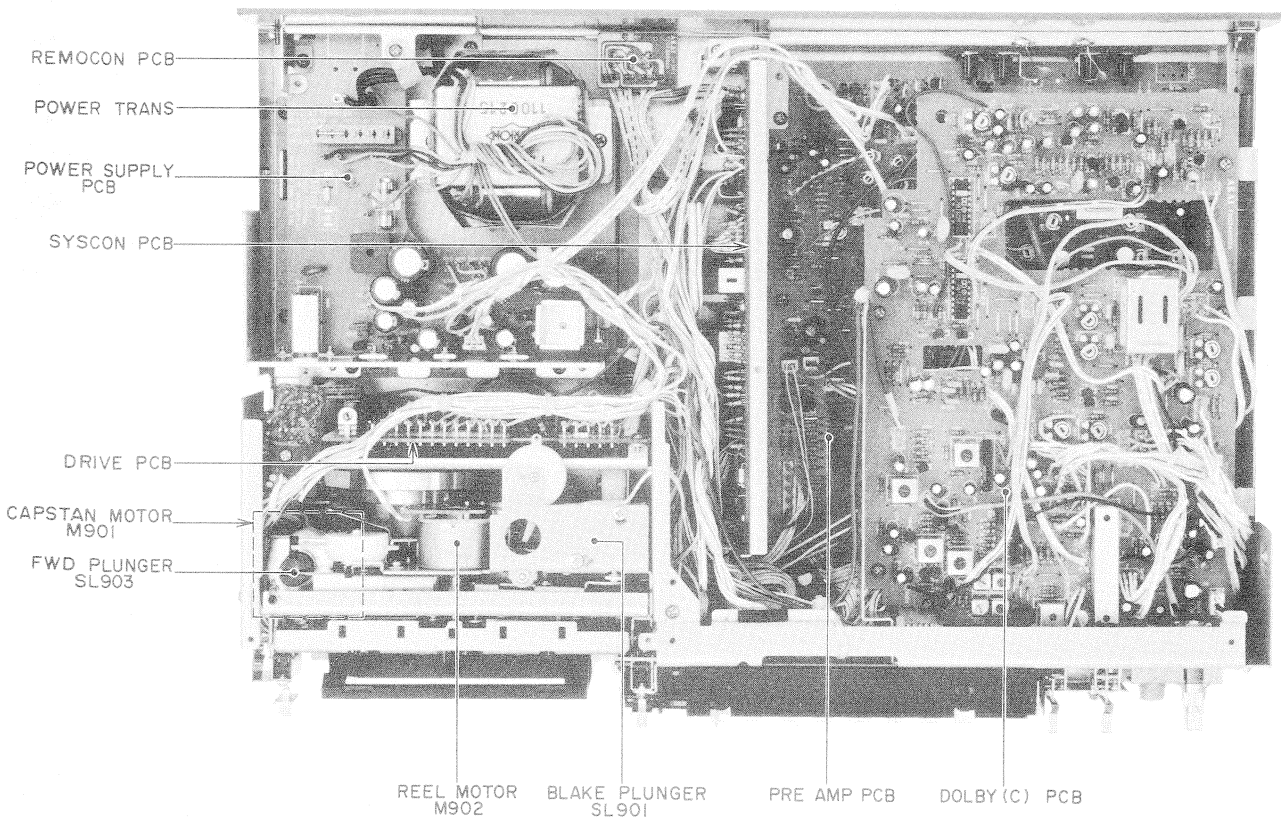

Fig. 3 Top View

IV. VOLTAGE AND CYCLE CONVERSION

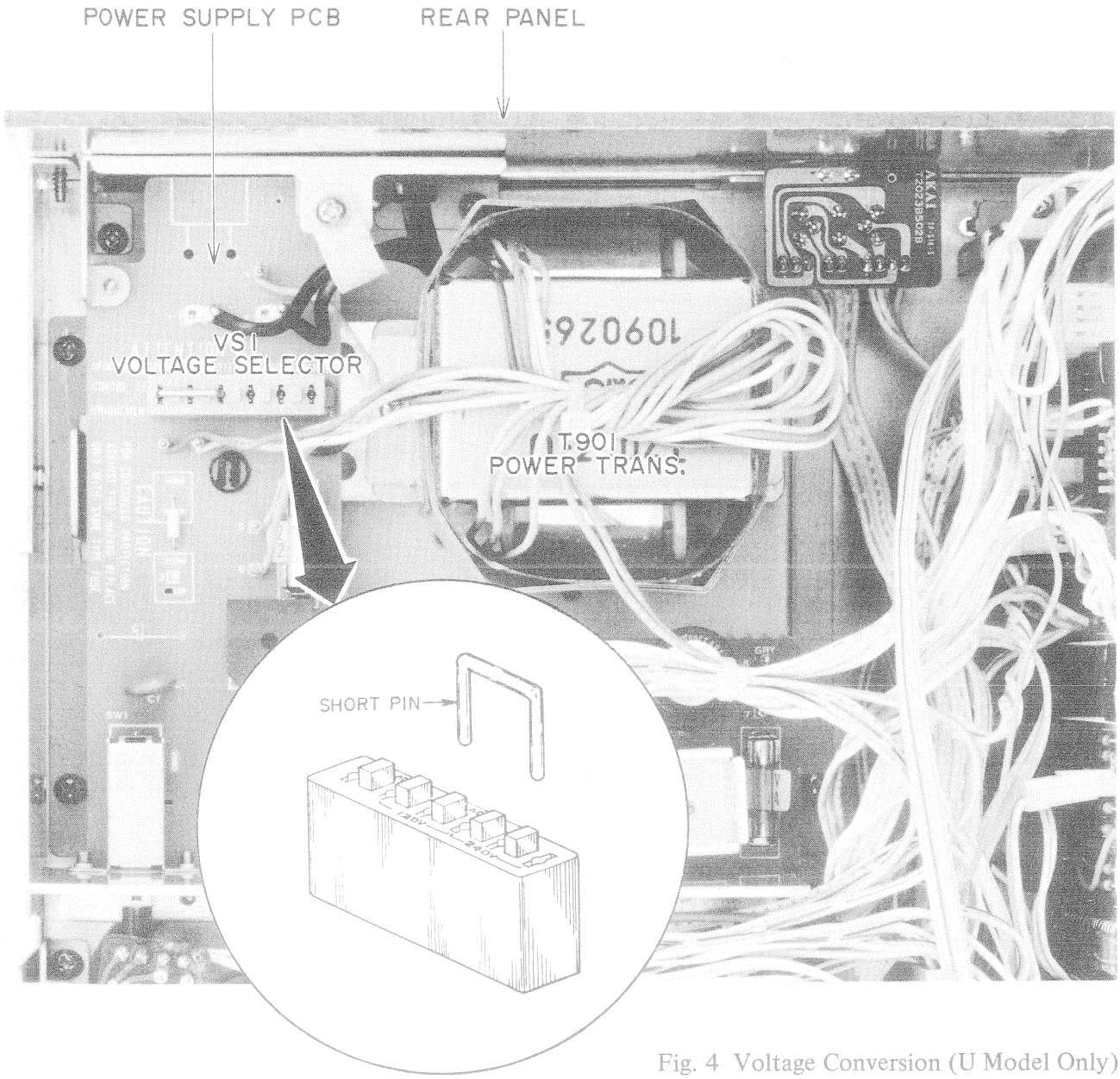

Fig. 4 Voltage Conversion (U Model Only)

1. VOLTAGE CONVERSION

Models for Canada, Europe, USA, UK, Australia and Japan are not equipped with this facility.

Each machine is preset at the factory according to destination, but some machines can be set to 110V, 120V, 220V or 240V as required.

If voltage change is necessary, this can be accomplished as follows:

1) Disconnect power cord.
2) Loosen holding screws and remove upper cover.
3) Remove short pin plug from present holes and replace in correct holes.
   Follow the markings explicitly.

2. CYCLE CONVERSION

With DC motor, cycle conversion is not necessary.

V. MECHANICAL AND HEAD ADJUSTMENT

Refer to Service Manual GX-F66R

VI. ELECTRICAL ADJUSTMENT

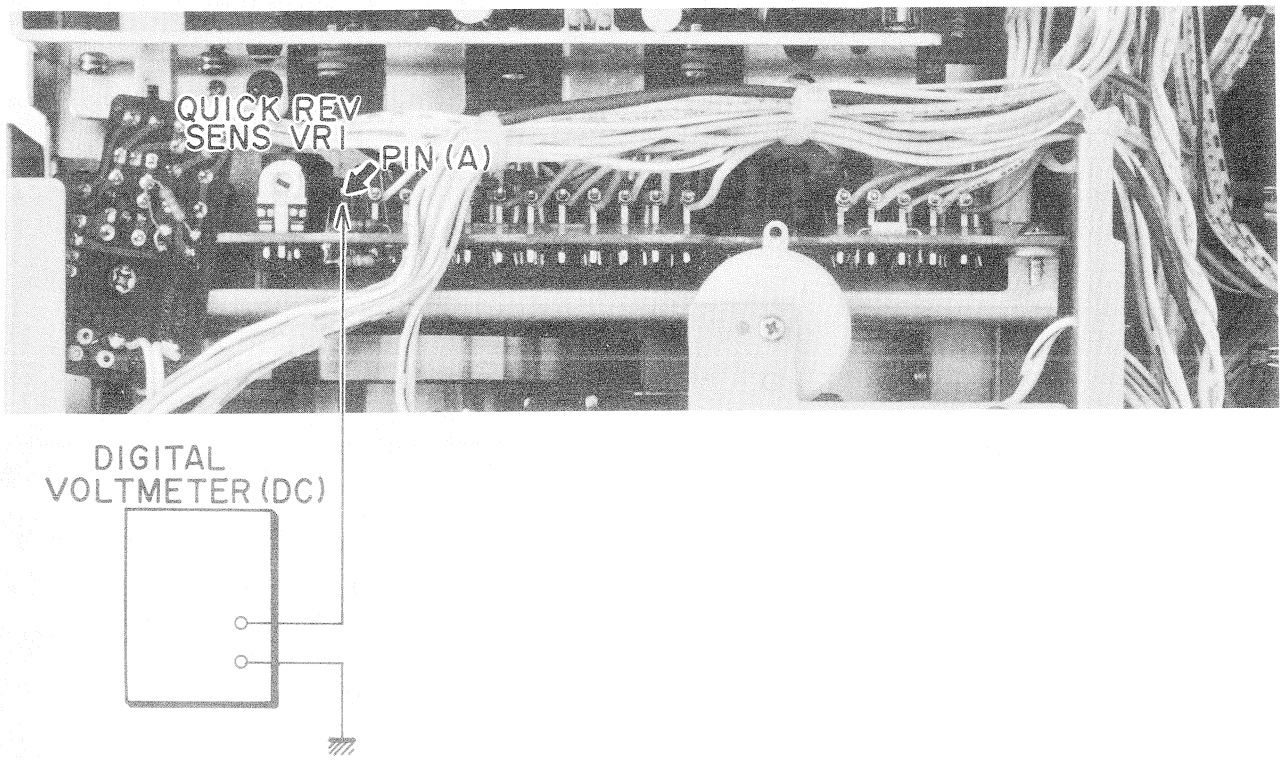

Fig. 5 Drive PCB

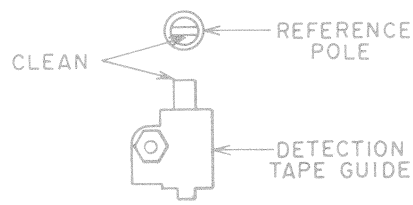

Fig. 6

1. QUICK REVERSE SENSITIVITY ADJUSTMENT

1) Make a tapeless cassette pack by removing the tape from the white colored test tape.
2) Connect the Digital Voltmeter between the PIN (A) and earth.
3) Using the tapeless cassette pack, adjust VR1 so that the Digital Voltmeter readings 6V ±0.2V DC at FWD play mode.

NOTE: Clean the Reference Pole and the Detection Tape Guide, before this adjustment. (Fig. 6)

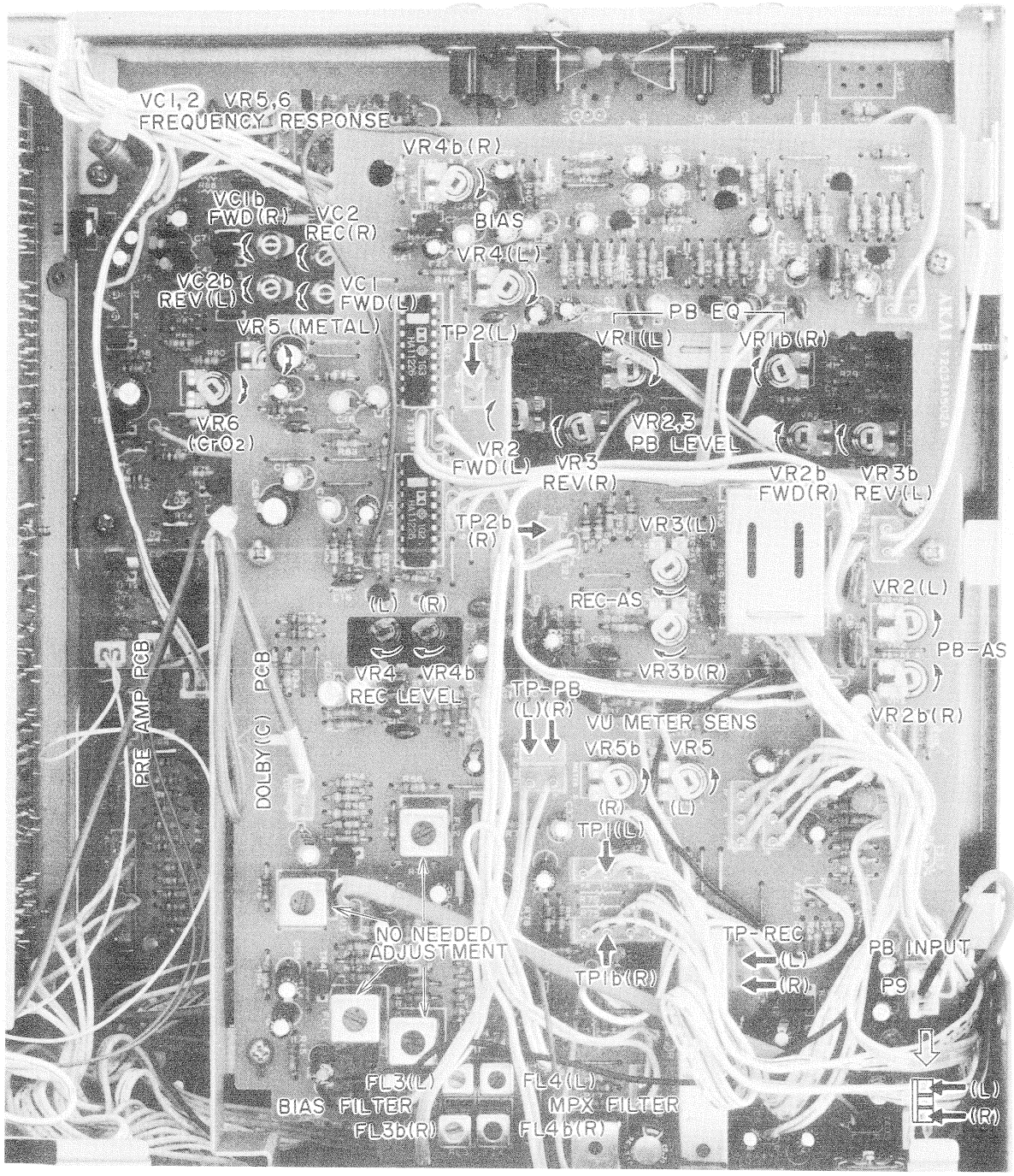

Fig. 7 Amplifier Adjustment

2. PRE AMPLIFIER ADJUSTMENT

Step	Adjustment Item	Test Tape Supply Signal	Mode	Adjustment Parts	Result	Remarks
1	FWD PB Level	333 Hz Test Tape (TF-101CL)	FWD PB	VR2 Pre Amp PCB	−5.5 ± 0.5 dBm (410 mV)	
2	REV PB Level	333 Hz Test Tape (TF-101CL)	REV PB	VR3 Pre Amp PCB	−5.5 ± 0.5 dBm (410 mV)	
3	PB EQ	10 kHz Test Tape (TF-106 CH)	FWD PB REV PB	VR1 Pre Amp PCB	−19 ± 1.5 dBm	

Step	Adjustment Item	Test Tape Supply Signal	Mode	Adjustment Parts	Result	Remarks
4	Normal Position Frequency Response (FWD)	Normal Blank Tape 1 kHz, 10 kHz −25.5 dBm	FWD REC/PB	VC1 Pre Amp PCB	1 kHz to 10 kHz flat response	
5	Normal Position Frequency Response (REV)	Normal Blank Tape 1 kHz, 10 kHz −25.5 dBm	REV REC/PB	VC2 Pre Amp PCB	1 kHz to 10 kHz flat response	
6	CrO_2 Position Frequency Response	CrO_2 Blank Tape 1 kHz, 10 kHz −25.5 dBm	FWD/REV REC/PB	VR6 Pre Amp PCB	1 kHz to 10 kHz flat response	
7	Metal Position Frequency Response	Metal Blank Tape 1 kHz, 10 kHz −25.5 dBm	FWD/REV REC/PB	VR5 Pre Amp PCB	1 kHz to 10 kHz flat response	
8	REC Level	Normal Blank Tape 1 kHz, −5.5 dBm	FWD/REV REC/PB	VR4 Pre Amp PCB	−5.5 ± 0.5 dBm (410 mV)	
9	MPX Filter	19 kHz from oscillator	REC	FL4 Dolby (C) PCB	Minimum Output	MPX Filter ON
10	Bias Filter	No Signal Input	REC	FL3 Dolby (C) PCB	Minimum Output	Set REC Volume to maximum
11	VU Meter Sensitivity	1 kHz, −5.5 dBm from oscillator	REC	VR5 Dolby (C) PCB	0 dB (VU) indication	

NOTES: 1. Output volume should be at maximum.
2. Dolby NR Switch to OFF Position.
3. Except for Step 9 set Dolby Filter Switch to OFF Position.
4. Use the following cassette measuring tapes:
Normal Tape: Maxell UD C-60
CrO_2 Tape: TDK SA C-60
Metal Tape: TDK MA-C C-60

3. DOLBY ADJUSTMENT (Refer to Fig. 7 Dolby (C) PCB)

1) Set Dolby Switch to C-Type and the set to REC/PAUSE mode.
2) Input the signal of 700 Hz from LINE IN and adjust the input level so that TP1 will be 0 dBm (0.775V).
3) Adjust VR3 (REC-AS) so that TP-REC will be 0 ± 0.5 dBm.
4) Set Dolby Switch to OFF position.
5) Input the signal of 700 Hz from LINE IN and adjust the input level so that TP1 will be −30.5 dBm.
6) Set Dolby Switch to C-Type.
7) Adjust VR4 (BIAS) so that TP-REC will be −19.5 ±0.3 dBm.
8) Set Dolby Switch C-Type and the set to FWD PLAY mode.
9) Remove P9 connector (PB INPUT) and input the signal of 700 Hz from there.
10) Adjust the input level so that TP2 will be 0 dBm.
11) Adjust VR2 (PB-AS) so that TP-PB will be 0 ± 0.5 dBm.

NOTES: 1) For the adjustment, use Audio OSC, AC Voltmeter (mV meter).
2) Adjust both channels at right and left.

VII. CLASSIFICATION OF VARIOUS P.C BOARDS

1. P.C BOARD TITLES AND IDENTIFICATION NUMBERS

P.C BOARD TITLE	P.C BOARD NUMBER
Pre Amp P.C Board	T2023A5010
Dolby (C) P.C Board	T2034A502A
Syscon P.C Board (2)	T2023B5100
Drive P.C Board	T2023C5040
Power Supply P.C Board	T2023B502A
Key Board P.C Board (2)	T2023C511A
Dolby LED P.C Board	T2023B502E
Tape LED P.C Board	T2023B502D
Remote Control P.C Board	T2023B502B
Slide P.C Board	T2023B502F
Reverse P.C Board	T2023D5070
Lamp P.C Board	T2022D5140
Filter P.C Board	CL-5026
LD P.C Board	T2023D5090
Lamp Meter P.C Board	T2023B502C
Memory P.C Board (2)	T2023C511B
Detector P.C Board	T2022D5150
"	CY-0023

2. COMPOSITION OF VARIOUS P.C BOARDS

1) Pre Amp P.C Board T2023A5010 (2ED) and Tape LED P.C Board T2023B502D

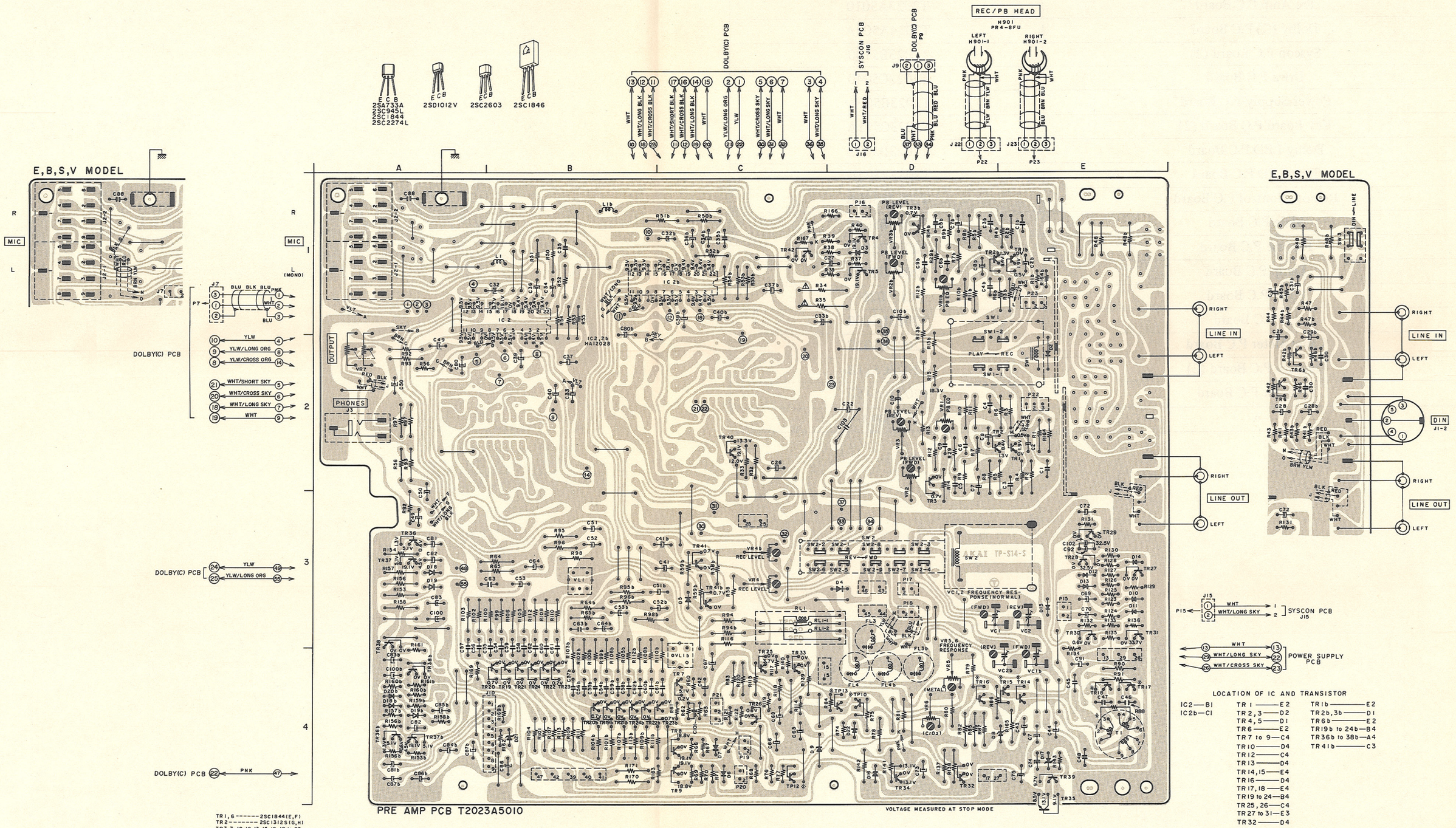

2) Syscon P.C Board (2) T2023B5100, Key Board P.C Board (2) T2023C511A, Remote Control P.C Board T2023B502B, Slide P.C Board T2023B502F, Reverse P.C Board T2023D5070 and Memory P.C Board (2) T2023C511B

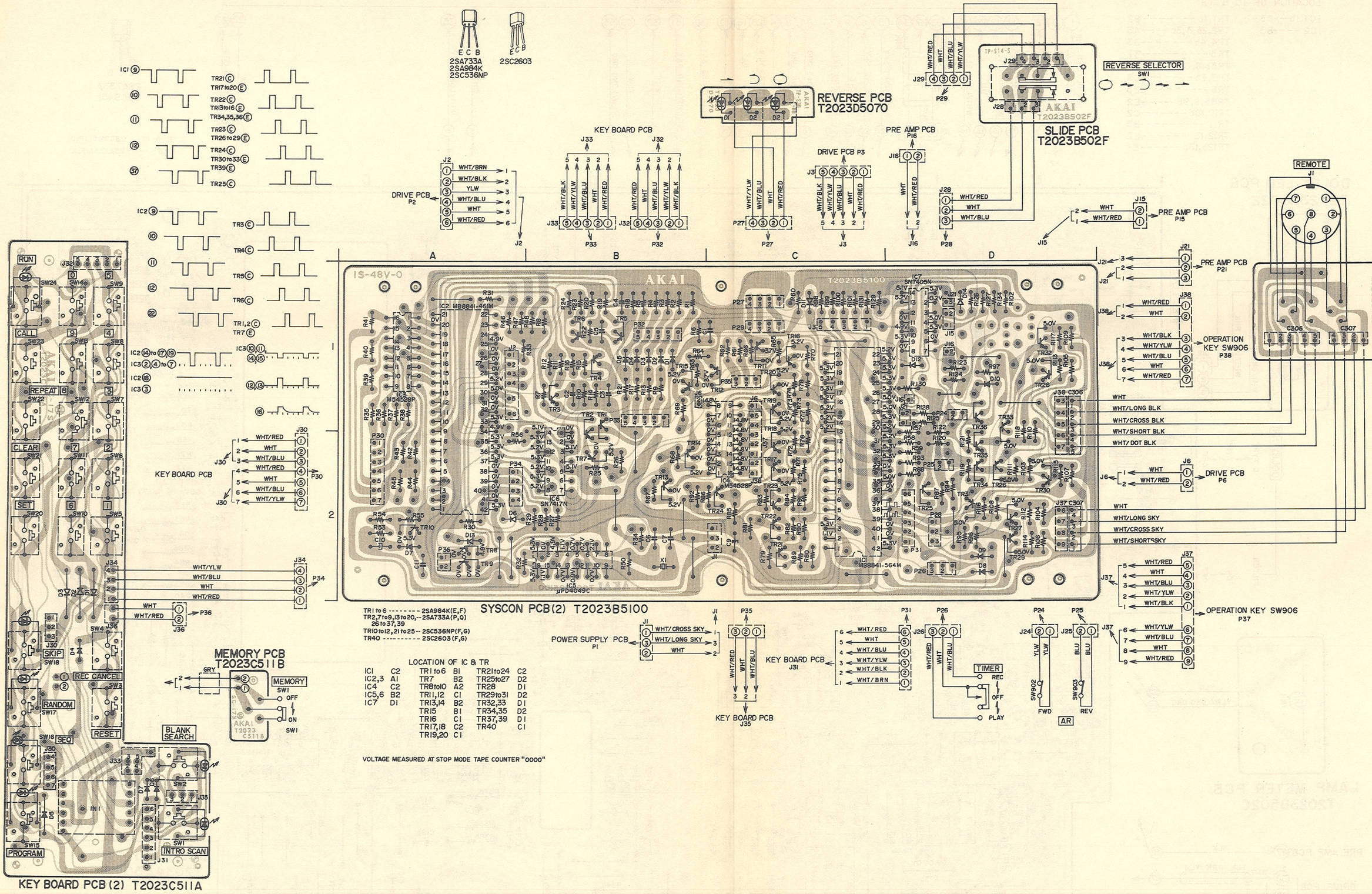

TR1 to 6 ---------- 2SA984K(E,F)
TR2,7 to 9,13 to 20,--2SA733A(P,Q)
26 to 37,39
TR10 to 12, 21 to 25-- 2SC536NP(F,G)
TR40 ---------- 2SC2603(F,G)

LOCATION OF IC & TR

IC1	C2	TR1 to 6	B1	TR21 to 24	C2
IC2,3	A1	TR7	B2	TR25 to 27	D2
IC4	C2	TR8 to 10	A2	TR28	D1
IC5,6	B2	TR11,12	C1	TR29 to 31	D2
IC7	D1	TR13,14	B2	TR32,33	D1
		TR15	B1	TR34,35	D2
		TR16	C1	TR37,39	D1
		TR17,18	C2	TR40	C1
		TR19,20	C1		

VOLTAGE MEASURED AT STOP MODE TAPE COUNTER "0000"

3) Dolby (C) P.C Board T2034A502A, Dolby LED P.C Board T2023B502E and Lamp Meter P.C Board T2023B502C

LOCATION OF IC & TR

IC1,1b---D3
IC2 ----B3

TR1,1b -------- B2
TR2,2b,3,3b ----A3
TR4,4b -------B3
TR5 ----------B1
TR5b,6,6b------A1
TR7,7b -------- C3
TR8 ----------E3
TR8b,9,9b-----E2
TR10,10b-------C2
TR11 ----------B3
TR12,13 -------E2
TR12b,13b------E1

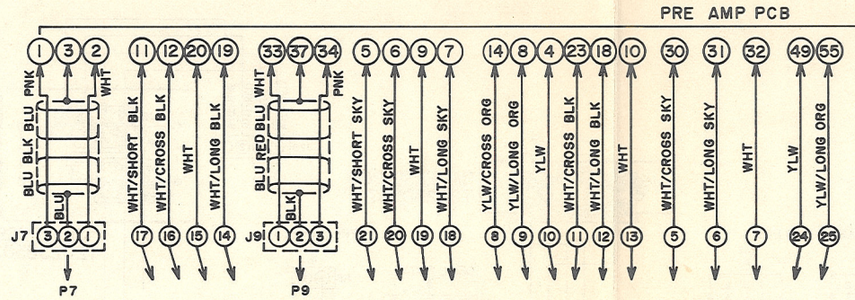

TR1 to 12--- 2SC945L(P,Q)
TR13 ----- 2SA733A(P,K)

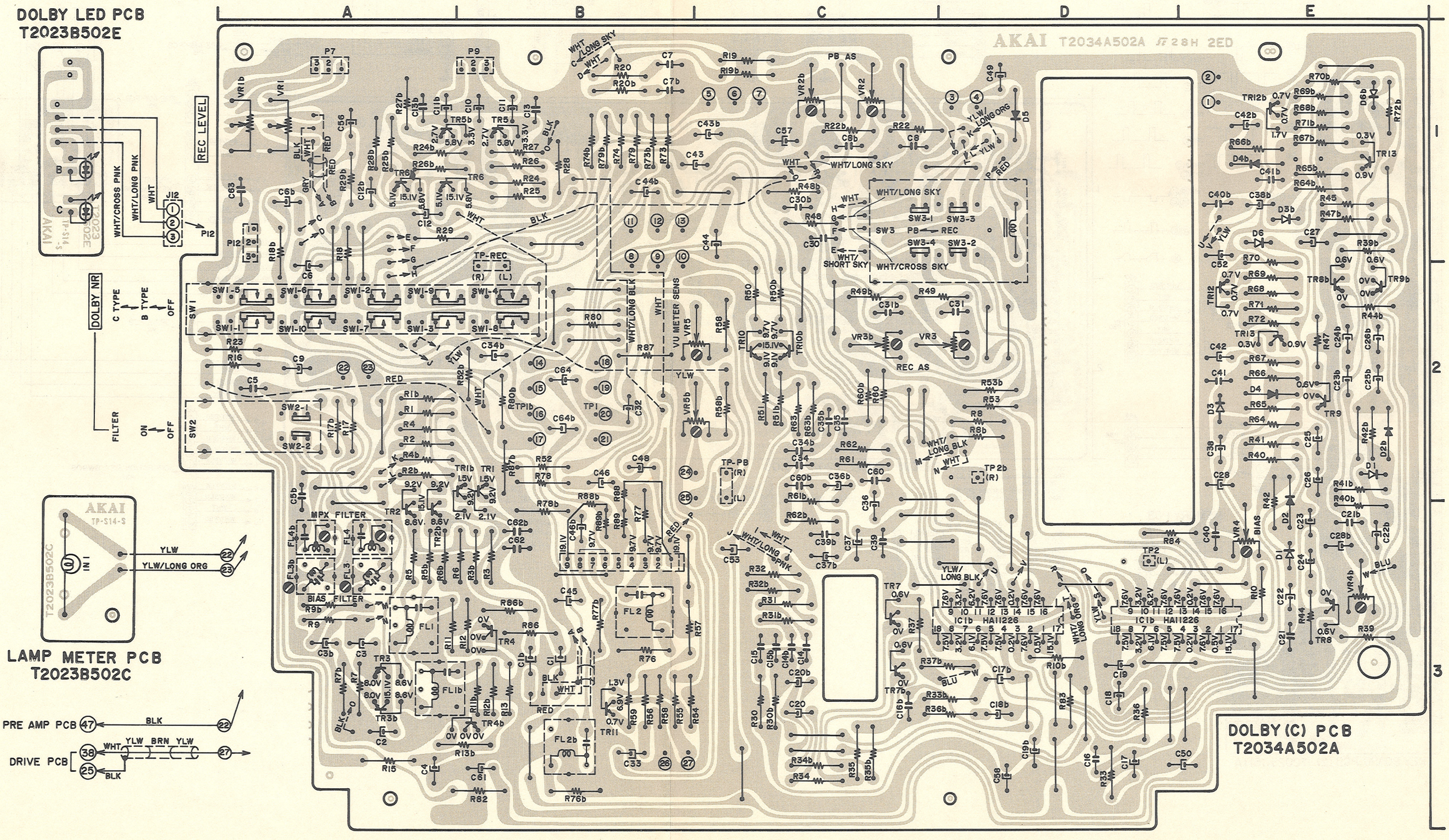

LAMP METER PCB
T2023B502C

4) Drive P.C Board T2023C5040 (4ED), LED P.C Board T2023D5090 (2ED), Lamp P.C Board T2022D5140, Filter P.C Board CL-5026 (2ED), Detector P.C Board T2022D5150 and Detector P.C Board CY-0023

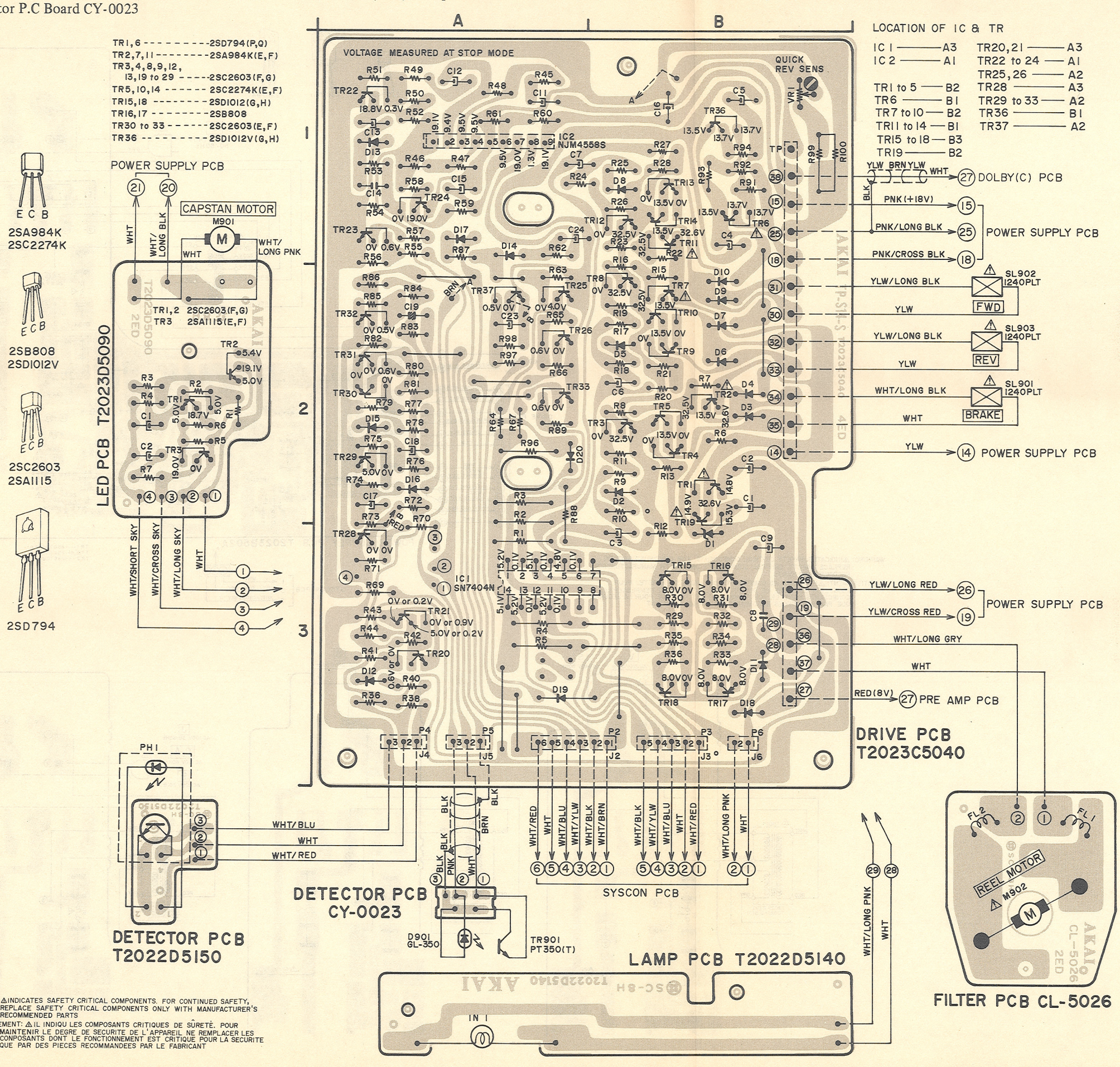

WARNING: ⚠INDICATES SAFETY CRITICAL COMPONENTS. FOR CONTINUED SAFETY, REPLACE SAFETY CRITICAL COMPONENTS ONLY WITH MANUFACTURER'S RECOMMENDED PARTS

AVERTISSEMENT: ⚠IL INDIQU LES COMPOSANTS CRITIQUES DE SÛRETÉ. POUR MAINTENIR LE DEGRE DE SECURITE DE L'APPAREIL NE REMPLACER LES CONPOSANTS DONT LE FONCTIONNEMENT EST CRITIQUE POUR LA SECURITE QUE PAR DES PIECES RECOMMANDEES PAR LE FABRICANT

5) Power Supply P.C Board T2023B502A

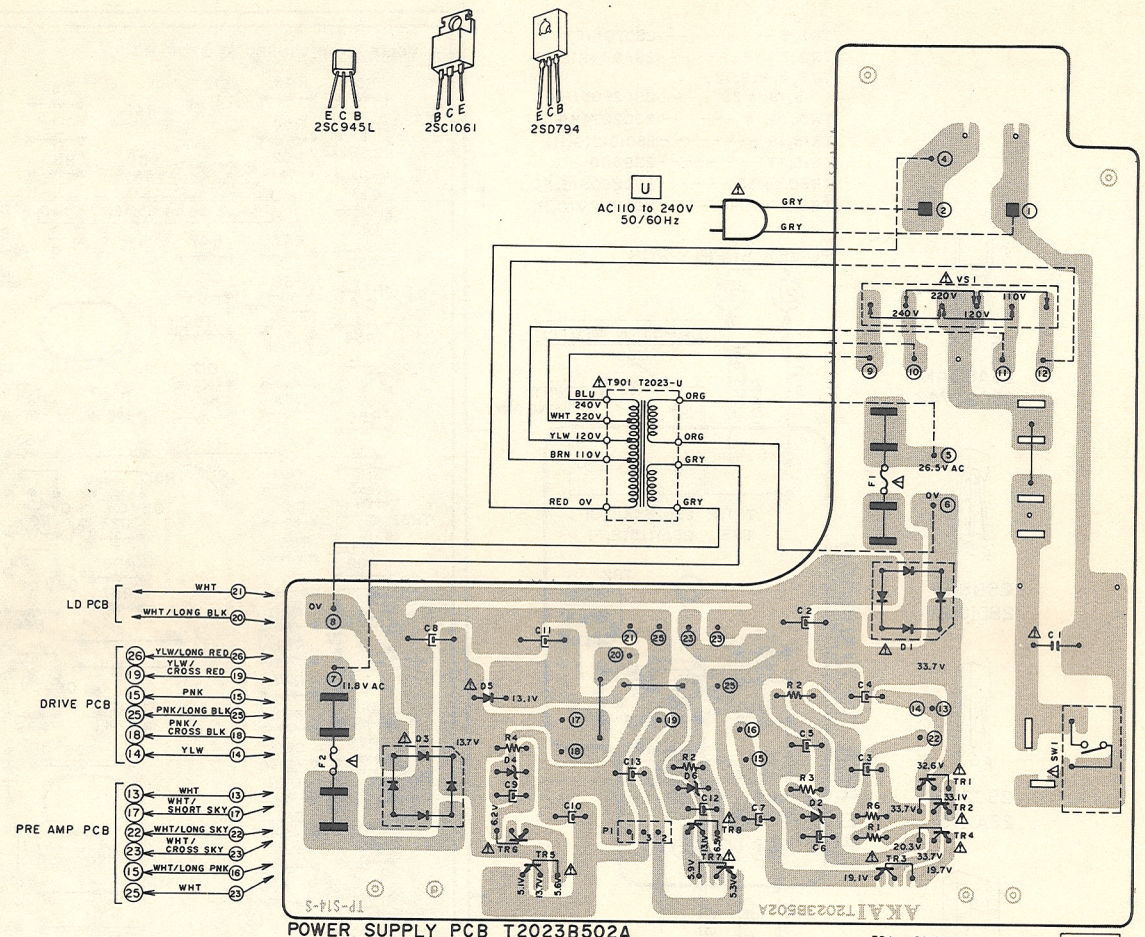

WARNING: ⚠INDICATES SAFETY CRITICAL COMPONENTS. FOR CONTINUED SAFETY, REPLACE SAFETY CRITICAL COMPONENTS ONLY WITH MANUFACTURER'S RECOMMENDED PARTS

AVERTISSEMENT: ⚠IL INDIQU LES COMPOSANTS CRITIQUES DE SÛRETÈ. POUR MAINTENIR LE DEGRE DE SECURITE DE L'APPAREIL NE REMPLACER LES CONPOSANTS DONT LE FONCTIONNEMENT EST CRITIQUE POUR LA SECURITE QUE PAR DES PIECES RECOMMANDEES PAR LE FABRICANT

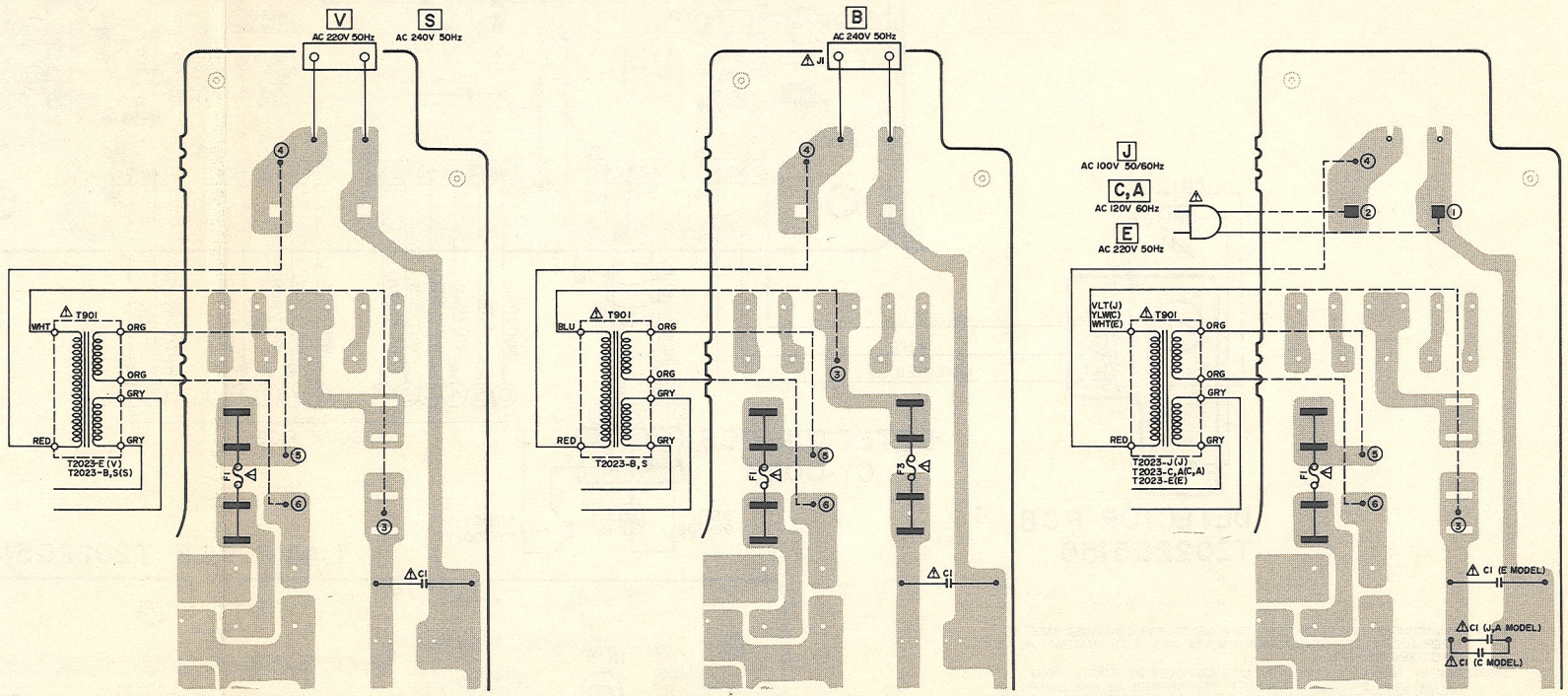

HOW TO USE THIS PARTS LIST

1. This parts list is compiled by various individual blocks based on assembly process.
2. When ordering parts, please describe parts number, serial number, and model number in detail.
3. How to read list.

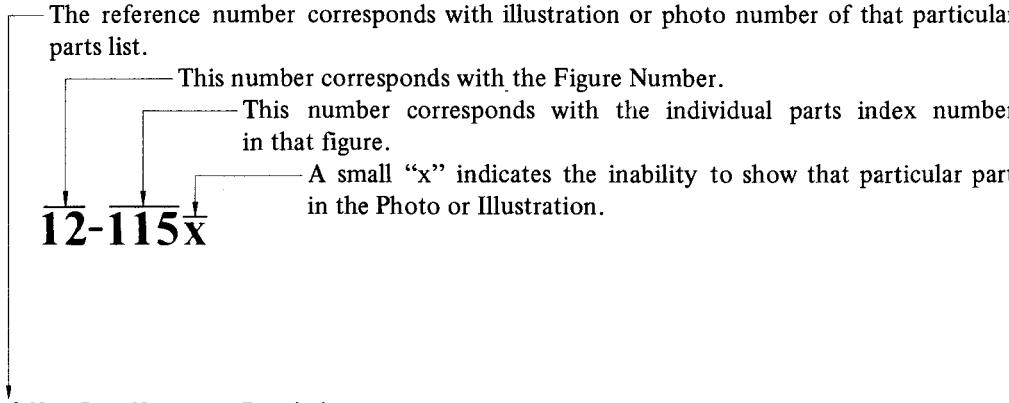

Ref. No.	Parts No.	Description
		FLYWHEEL BLOCK #13
12-115x	800425	Flywheel Block Assy. Comp.
12-116	244506	Flywheel Only
12-117x	244754	Felt, Flywheel
12-118	251324	Main Metal Case
12-119	253080	Main Metal

4. The symbol numbers shown on the P.C. Board list can be matched with the Composite Views of components of the Schematic Diagram of Service Manual.
5. The indications of Resistors and Capacitors in the photos of P.C. Board are being eliminated.
6. The shape of the parts and parts name, etc. can be confirmed by comparing them with the parts shown on the Electrical Parts Table of P.C. Board.
7. Both the kind of part and installation position can be determined by the Parts Number. To determine where a parts number is listed, utilize Parts Index at end of Parts List.
   It is necessary first of all to find the Parts Number. This can be accomplished by using the Reference Number listed at right of parts number in the Parts Index. (meaning of ref. no. outlined in Item 3 above).
8. Utilize separate "Price List for Parts" to determine unit price. The most simple method of finding parts Price is to utilize the reference number.

CAUTION:

1. When placing an order for parts, be sure to list the parts no. model no., and description. There are instances in which if any of this information is omitted, parts cannot be shipped or the wrong parts will be delivered.
2. Please be careful not to make a mistake in the parts no. If the parts no. is in error, a part different from the one ordered may be delivered.
3. Because parts number and parts unit supply in the Preliminary Service Manual (Basic Parts List) may be partially changed, please use this parts list for all future reference.

WARNING: ⚠ INDICATES SAFETY CRITICAL COMPONENTS. FOR CONTINUED SAFETY, REPLACE SAFETY CRITICAL COMPONENTS ONLY WITH MANUFACTURER'S RECOMEMNDED PARTS.

AVERTISSEMENT: ⚠ IL INDIQU LES COMPOSANTS CRITIQUES DE SURETE. POUR MAINTENIR LE DEGRE DE SECURITE DE L'APPAREIL NE REMPLACER LES COMPOSANTS DONT LE FONCTIONNEMENT EST CRITIQUE POUR LA SECURITE QUE PAR DES PIECES RECOMMANDEES PAR LE FABRICANT.

SECTION 2

PARTS LIST

TABLE OF CONTENTS

1. RECOMMENDED SPARE PARTS 21
2. HEAD BASE BLOCK 22
3. REEL TABLE BLOCK 23
4. MECHA FRAME BLOCK 24
5. PRE AMP P.C BOARD BLOCK 26
6. SYS. CON. P.C BOARD BLOCK 26
7. POWER SUPPLY P.C BOARD BLOCK 26
8. DRIVE P.C BOARD BLOCK 27
9. DOLBY (C) P.C BOARD BLOCK 27
10. KEYBOARD (2) P.C BOARD BLOCK 27
11. LD P.C BOARD BLOCK 27
12. FILTER P.C BOARD BLOCK 27
13. ASSEMBLY BLOCK 28
14. FINAL ASSEMBLY BLOCK 30
INDEX 31

Resistor and Capacitor which is not listed in this parts list, please refer to COMMON LIST FOR SERVICE PARTS.

1. RECOMMENDED SPARE PARTS

Because, if the parts listed below are on hand, almost any repair can be accomplished, we suggest that you stock these Recommended Spare Parts Items.

REF. NO.	PARTS NO.	DESCRIPTION
1-1	BHT2023A320A	HEAD BASE BLK GX-F66R
1-2	BI312117	REW IDLER ASSY
1-3	BI312118	TAKE UP IDLER ASSY
1-4	BMT2022A080A	⚠ MOTOR (PULLEY) BLK CS-F33R
1-5	BM314843	⚠ MOTOR EG-510ED-2F
1-6	BM328441	⚠ MOTOR RF-510T(12620)
1-7	BMT2016A320A	⚠ REEL MOTOR BLK (W/PULLEY) GX-F35
1-8	BR328424	TAKE-UP REEL TABLE ASSY
1-9	BT331665	⚠ TRANS POWER T2023-C,A (C,A,V)
1-10	BT331663	⚠ TRANS POWER T2023-J
1-11	BT331662	⚠ TRANS POWER T2023-U
1-12	BT331666	TRANS POWER T2023-B,S
1-13	BT331664	TRANS POWER T2023-E
1-14	EC315346	C S-FIX H ECV-1ZW50x32E 5.0-55
1-15	ED308953	D GERMA H 1K34A-LH SNP
1-16	ED308952	D GERMA V 1K34A-LR F07
1-17	ED331227	D GERMA V 1K34A-UF SNP
1-18	ED322982	D GERMA V 1S188FM-1-LR F07
1-19	ED322773	D LED SLP-255D-01 GRN
1-20	ED624903	D SILICON H 1S2473
1-21	ED316143	D SILICON H 1S2473HS F10
1-22	ED560913	D SILICON V 1S2473VE
1-23	ED306109	D SILICON W03B 100/1.0A
1-24	ED319463	D SILICON 4B4B41 100/4.0A
1-25	ED328486	D ZENER H HZ15 3
1-26	ED324013	D ZENER H HZ20 2
1-27	ED331626	D ZENER H HZ3 B2
1-28	ED305704	D ZENER H HZ4 B2
1-29	ED319167	D ZENER H HZ6 C3
1-30	ED331667	D ZENER H HZ7 A1
1-31	ED306014	D ZENER H HZ9 C3
1-32	ED331263	IND LE LT-1016 GRAPH
1-33	EF593706	⚠ FUSE SEMKO T 250V 0.50A (F3) (B)
1-34	EF601301	⚠ FUSE SEMKO T 250V 2A (F1,2) (E, B, S, V)
1-35	EF306950	⚠ FUSE TSC A 250V 2A (F1,2) (U,J)
1-36	EF306954	⚠ FUSE TSC 125V 2A (F1,2) (C,A)
1-37	EI336737	IC HA11226
1-38	EI336761	IC LA6458S
1-39	EI331658	IC MB8841-461M
1-40	EI336801	IC MB8841-564M
1-41	EI331659	IC M54528P
1-42	EI201940	IC NJM4558S
1-43	EI302681	IC SN7404N
1-44	EI331661	IC SN7405N
1-45	EI331660	IC SN7417N
1-46	EI319555	IC μPD4049C
1-47	EJ310567	⚠ SOCKET INLET 0378PC-GS E 2P (B, S, V)
1-48	EJ321328	PHONE J HLJ0345-010 2x3P (P)
1-49	EJ337622	PHONE J THROW HLJ0345-210 3P 2x3P
1-50	EJ330545	PHONE J 3P HLJ0315-020 6.3 (P)
1-51	EJ337623	PHONE J 3P HLJ0315-023 6.3
1-52	EL309960	PL CORD 24.0V 50mA 450/450
1-53	EL304025	PL H LEAD 10V 110mA
1-54	EL317599	PL H LEAD 6.3V 100mA
1-55	EL300186	PL LEAD 8V 60mA
1-56	EM331669	IND LE SL-1003 CHARACTER
1-57	EP318644	⚠ SOLENOID 1240PLT 27V
1-58	EP318645	⚠ SOLENOID 1240PLT 27V
1-59	EP328529	RELAY LEAD LAB2NS 2NO 12V
1-60	ER328490	FILTER DB D07-001K 19KHz
1-61	ER328491	FILTER DB D07-003K 100KHz
1-62	ES312234	⚠ SW PUSH SDL-1P 01-1 E (U, E, B, S, V)
1-63	ES312235	⚠ SW PUSH SDL-1P 01-1 J (J)
1-64	ES312238	⚠ SW PUSH SDL-1P 01-1 UC (C,A)
1-65	ES330521	SW LEAF BSW-47AB 01-1 NC
1-66	ES330522	SW LEAF BSW-47AC 01-1 NC
1-67	ES332448	SW LEVER 01030123 2-10-03N
1-68	ES336779	SW LEVER 2-02-02S
1-69	ES283072	SW SLIDE SSC22LP 2-02-02N (E, B, S, V)
1-70	ES201527	SW SLIDE SSS212 1-01-02N
1-71	ES337322	SW SLIDE 00230699 2-02-03N
1-72	ES311975	SW SOLENOID R8150050 27V 10-2W
1-73	ES328415	SW SOLENOID SWE018401 18V 04-2S
1-74	ES328530	SW SOLENOID SWE018404 18V 04-2N
1-75	ES323367	SW TACT KEC10001
1-76	ES324677	SW TACT KEC11904
1-77	ET311977	PHOTO SENSOR SPI-201
1-78	ET200558	TR 2SA1115 E,F
1-79	ET336735	TR 2SA733(A) P,K
1-80	ET539133	TR 2SA733A P
1-81	ET554657	TR 2SA733A P,Q
1-82	ET324134	TR 2SA984K E,F
1-83	ET328438	TR 2SB808-V F, G
1-84	ET375603	TR 2SC1061 B,C
1-85	ET603257	TR 2SC1312S G,H
1-86	ET308954	TR 2SC1844 E,F
1-87	ET310920	TR 2SC1846 R,S
1-88	ET309353	TR 2SC2274 E, F
1-89	ET200506	TR 2SC2603 F
1-90	ET200985	TR 2SC2603 F,G
1-91	ET635231	TR 2SC536NP F,G
1-92	ET639437	TR 2SC945L Q,P
1-93	ET328868	TR 2SD1012-V G,H
1-94	ET666404	TR 2SD571 K,L
1-95	ET332245	TR 2SD794 P
1-96	ET307349	TR 2SD794 P,Q
1-97	ET307349	TR 2SD794 P,Q
1-98	EV316442	R S-FIX H D8 3P 102
1-99	EV315542	R S-FIX H D8 3P 103
1-100	EV322411	R S-FIX H D8 3P 202
1-101	EV315753	R S-FIX H D8 3P 203
1-102	EV315540	R S-FIX H D8 3P 502
1-103	EV315541	R S-FIX H D8 3P 503
1-104	EV522652	R S-FIX V V8K1-1 3P 105
1-105	EV202110	VR ROTARY 16P11x0S A503 A503
1-106	EV313538	VR ROTARY 16P20x1B B103
1-107	HE325859	HEAD E HF213131 C
1-108	HPH2206A010A	HEAD R/P PR4-8FU C
1-109	MB314317	BELT CAPSTAN
1-110	MB314722	BELT COUNTER
1-111	MIB601782	FLYWHEEL (A) PART
1-112	MIB601783	FLYWHEEL (B) PART
1-113	MV328322	MAIN CASE
1-114	MZ283140	⚠ SOCKET SELECTOR X-17238 6P (U)
1-115	TCT2010D090A	PINCH ROLLER (L) BLK CS-M40R
1-116	TCT2010D100A	PINCH ROLLER (R) BLK CS-M40R

HEAD BASE BLOCK

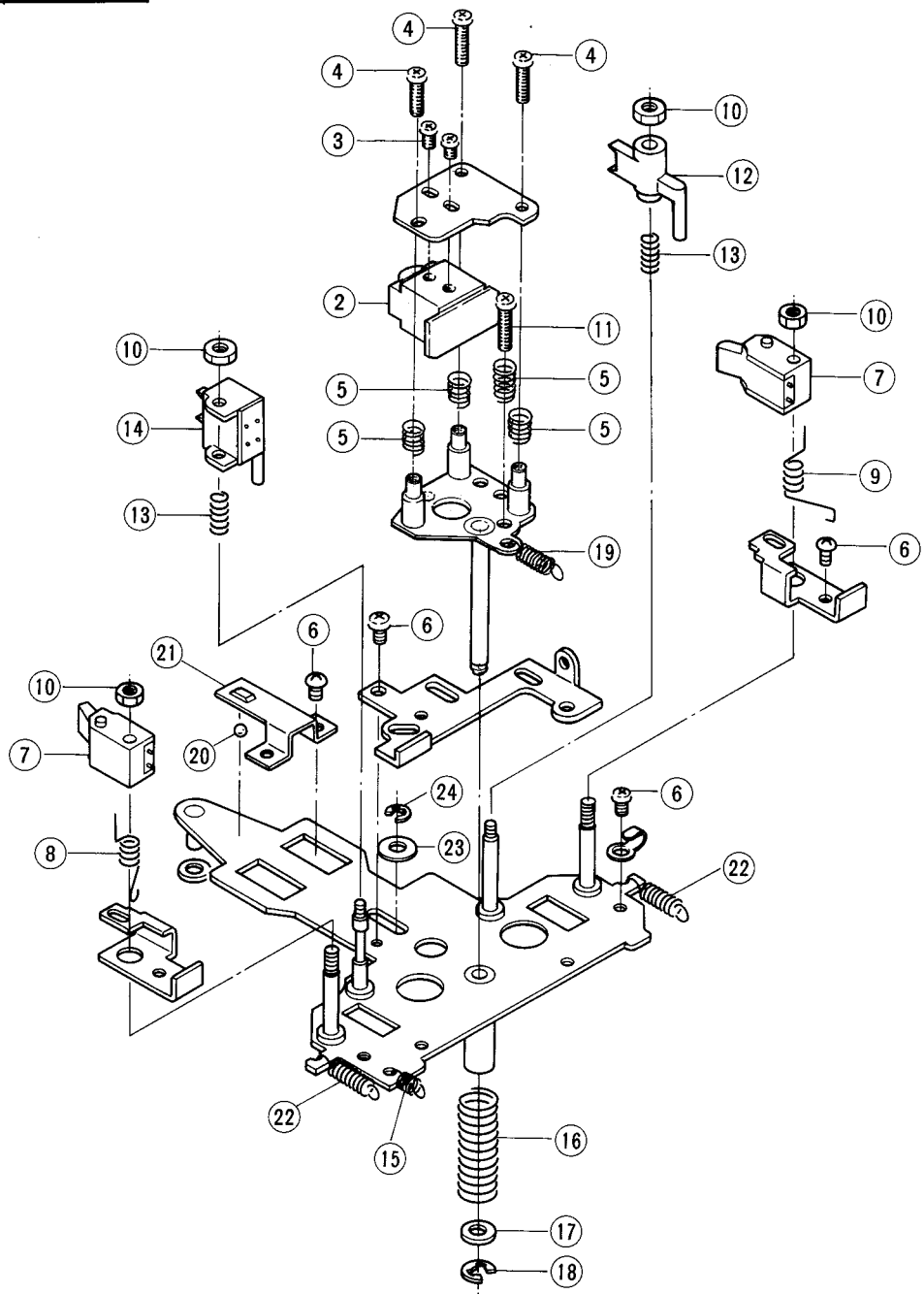

2. HEAD BASE BLOCK

REF. NO.	PARTS NO.	DESCRIPTION
2-1x	BHT2023A320A	HEAD BASE BLK GX-F66R
2-2	HPH2206A010A	HEAD R/P PR4-8FU C
2-3	ZS477876	PAN20x03STL CMT
2-4	ZS536488	BID20x08STL CMT
2-5	ZG402895	CS ANGLE ADJUST SPRING
2-6	ZS592378	PAN26x03STL CMT
2-7	HE325859	HEAD E HF213131 C
2-8	ZG313316	ERASE HEAD SPRING (A)
2-9	ZG313874	ERASE HEAD SPRING (B)
2-10	ZW273734	N20BRS NI3 1
2-11	ZS465298	PAN23x10STL CMT
2-12	HZ313313	TAPE GUIDE
2-13	ZG313314	ADJUST SPRING
2-14	BZT2010A070A	DETECTION TAPE GUIDE BLK CS-M40R
2-15	ZG312921	SP T1-3.2/0.2-9.0 T1-038
2-16	ZG313960	SP PUSH
2-17	ZW556828	PW32x100x050STL CMT
2-18	ZW270088	RING E 190SUP CMT
2-19	ZG402895	CS ANGLE ADJUST SPRING
2-20	MV357208	BALL200STL
2-21	MH314340	HEAD HOLDER
2-22	ZG312946	SP T1-3.2/0.29-16.0 T1-06
2-23	ZW328682	PW31x070x050PBR
2-24	ZW270088	RING E 190SUP CMT

REEL TABLE BLOCK

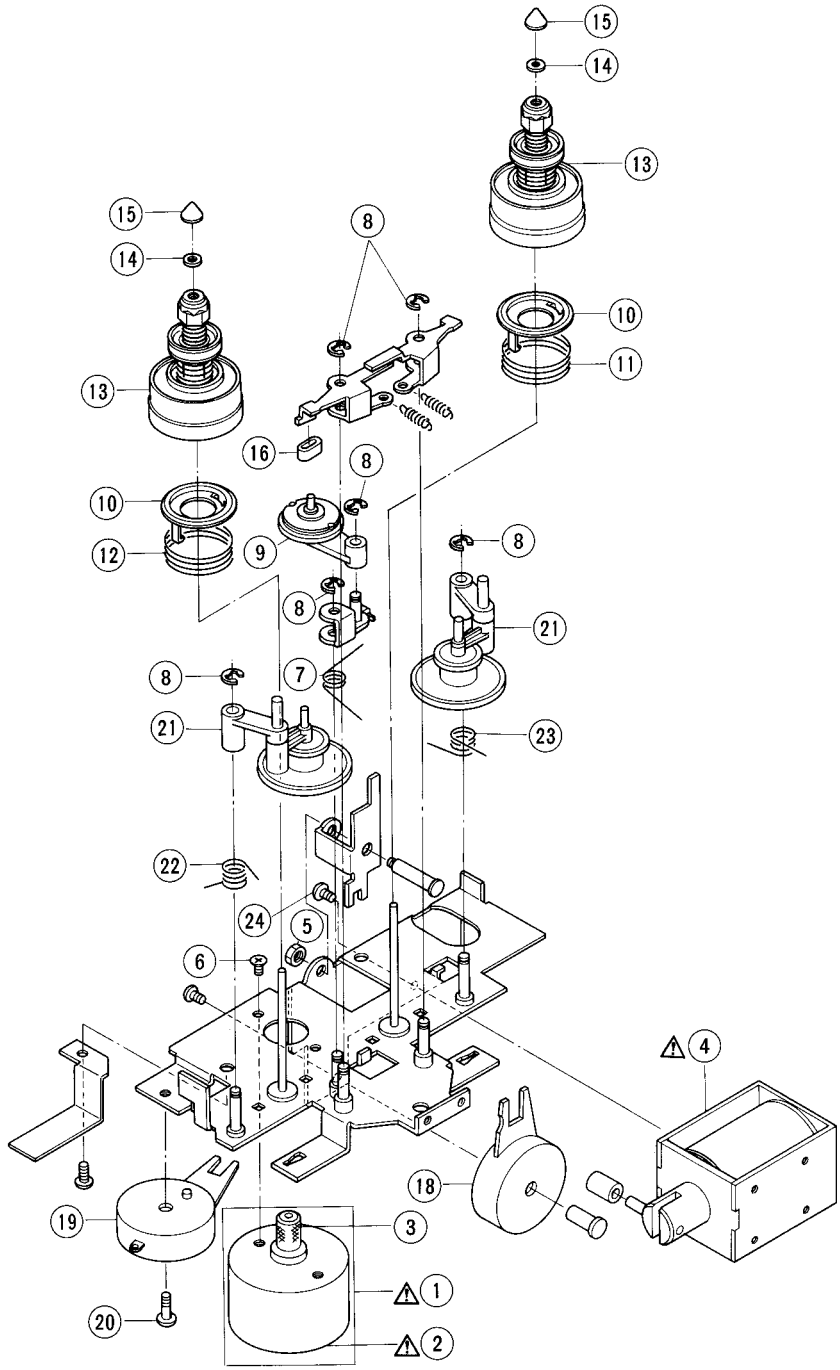

3. REEL TABLE BLOCK

REF. NO.	PARTS NO.	DESCRIPTION
	REEL MOTOR BLOCK	
3-1	BMT2016A320A	⚠ REEL MOTOR BLK (W/PULLEY) GX-F35
3-2	BM328441	⚠ MOTOR RF-510T (12620)
3-3	MR328360	REEL MOTOR PULLEY
	PLUNGER BLOCK	
3-4	EP318645	⚠ SOLENOID 1240PLT 27V (SL901)
	REEL TABLE BLOCK	
3-5	ZW516993	N30STL CMT 1
3-6	ZS430413	CTS26x04STL CMT
3-7	ZG314747	SP TORSION IDLER
3-8	ZW270088	RING E 190SUP CMT
3-9	BI312117	REW IDLER ASSY
3-10	TC328365	BT DRUM
3-11	ZG328366	BT SPRING
3-12	ZG330049	SP PUSH BACK TENSION
3-13	BR328424	TAKE-UP REEL TABLE ASSY
3-14	ZW330073	PW21x040x020
3-15	MT305793	REEL CAP
3-16	MB282104	BRAKE RUBBER
3-17	ZG321534	SP T2-3.2/0.29-12.5 T2-060
3-18	BZT2022A260A	DAMPER (C) ASSY CS-F33R
3-19	BZT2016A330A	DAMPER (B) ASSY GX-F35
3-20	ZS479474	PAN26x05STL CMT
3-21	BI312118	TAKE UP IDLER ASSY
3-22	ZG314876	SP TORSION IDLER CLAMP (A)
3-23	ZG314749	SP TORSION IDLER CLAMP (B)
3-24	ZS417137	BID30x04STL CMT

MECHA FRAME BLOCK

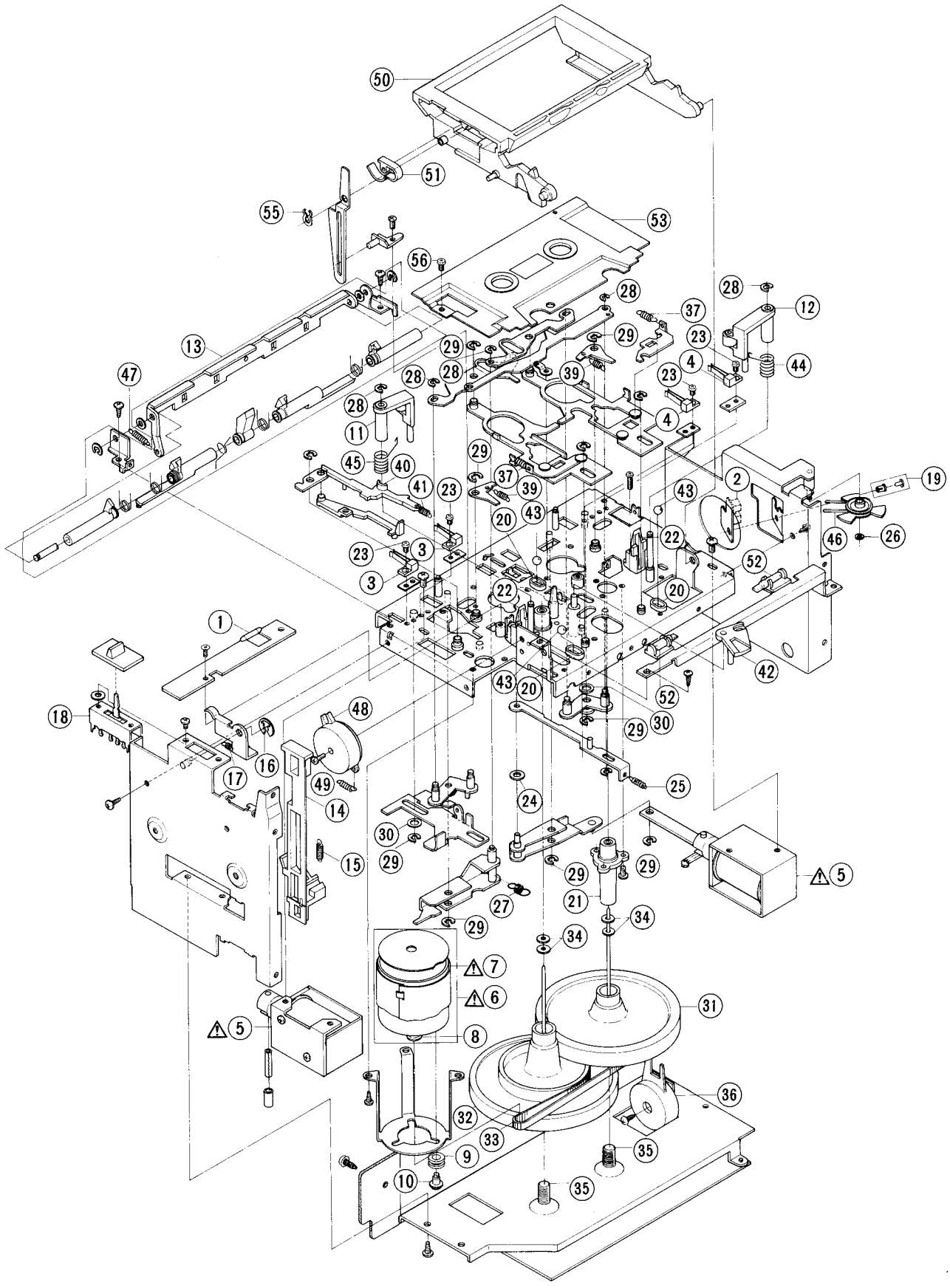

4. MECHA FRAME BLOCK

REF. NO.	PARTS NO.	DESCRIPTION
		LAMP P.C BOARD BLOCK
4-1	EL317599	PL H LEAD 6.3V 100mA (IN1)
		DETECTION P.C BOARD BLOCK
4-2	ET311977	PHOTO SENSOR SPI-201 (PH1)
		SW LEAF (A), (D) BLOCK
4-3	ES330521	SW LEAF BSW-47AB 01-1 NC (SW902, 904)
		SW LEAF (B), (C) BLOCK
4-4	ES330522	SW LEAF BSW-47AC 01-1 NC (SW903, 905)
		PLUNGER ASSY
4-5	EP318644	⚠ SOLENOID 1240PLT 27V (SL902, 903)
		MOTOR BLOCK
4-6	BMT2022A080A	⚠ MOTOR (PULLEY) BLK CS-F33R
4-7	BM314843	⚠ MOTOR EG-510ED-2F
4-8	MR328479	MOTOR PULLEY
4-9	MB282778	RUBBER BUSH
4-10	ZS321338	MOTOR SCREW
		PINCH ROLLER (L) BLOCK
4-11	TCT2010D090A	PINCH ROLLER (L) BLK CS-M40R
		PINCH ROLLER (R) BLOCK
4-12	TCT2010D100A	PINCH ROLLER (R) BLK CS-M40R
		LEVER EJECT BLOCK
4-13	BZT2023A310A	LEVER EJECT BLK GX-F66R
		CHASSIS (L) BLOCK
4-14	ML314151	LEVER JOINT
4-15	ZG318204	SP T2-3.2/0.29-16 T2-062
4-16	ZW270101	RING E300SUP CMT
4-17	ZG312944	SP T1-3.2/0.29-12.5 T1-060
		SW SLIDE BLOCK
4-18	ES330463	SW SLIDE 00230593 2-02-03S (SW901)
		MECHA FRAME BLOCK
4-19	ZW312121	RV NYL26x042 BL
4-20	MS302191	BALL GUIDE
4-21	MV328322	MAIN CASE
4-22	TC314156	HOLDER CASSETTE
4-23	ZS460438	BID20x03STL CMT
4-24	ZW438928	PW31x048x020PBR
4-25	ZG312942	SP T1-3.2/0.29-10.0 T1-058
4-26	ZW321437	PUSH WASHER
4-27	ZG336651	SP PULL PLAY LEVER (A)
4-28	ZW270088	RING E 190SUP CMT
4-29	ZW270101	RING E300SUP CMT
4-30	ZW649991	PW41x070x030PBR
4-31	MIB601782	FLYWHEEL (A) PART
4-32	MIB601783	FLYWHEEL (B) PART
4-33	MB314317	BELT CAPSTAN
4-34	ZW694798	PW31x070x020TFL
4-35	ZS302318	HOLD SCREW
4-36	BZT2016A330A	DAMPER (B) ASSY GX-F35
4-37	ZG318083	SP PULL CLAMP
4-38x	HZ314069	SP PLATE HEAD BASE
4-39	ZG310531	SP T1-4.0/0.4-12.5 T1-109
4-40	ML314337	LEVER EJECT CHECK
4-41	ZG312921	SP T1-3.2/0.2-9.0 T1-038
4-42	MR314339	CAM HEAD CHANGE
4-43	MV269965	BALL 400STL
4-44	ZG310694	PINCH ROLLER RETURN SPRING (A)
4-45	ZG310695	PINCH ROLLER RETURN SPRING (B)
4-46	MB314722	BELT COUNTER
4-47	ZG336064	SP PULL EJECT
4-48	BZT2021A200A	DAMPER (A) BLK CS-F330
4-49	ZG324329	SP T2-3.2/0.29-11.2 T2-059
4-50	TC-328351	CASSETTE HOLDER (BL)
4-51	ZG321487	MOLD SPRING
4-52	EL309960	PL CORD 24.0V 50mA 450/450
4-53	SZB314713A	LID DECORATION PART
4-54x	SZB314713B	LID DECORATION (BL) PART
4-55	ZW332843	RING GRIP 380STL ACP
4-56	ZS432843	PAN26x04STL CMT

5. PRE AMP P.C BOARD BLOCK

REF. NO.	PARTS NO.	DESCRIPTION
5-1	BAT2040A080A	PC PRE AMP BLK GX-F66RC(U) (U, J, C, A)
5-2	BAT2040A080B	PC PRE AMP BLK GX-F66RC(E) (E, B, S, V)
5-3	BAT2040A080C	PC PRE AMP BLK GX-F66RCP(U) (U, J, C, A)
5-4	BAT2040A080D	PC PRE AMP BLK GX-F66RCP(E) (E, B, S, V)
5-IC2	EI311959	IC HA12028
5-TR1	ET308954	TR 2SC1844 E, F
5-TR2	ET603257	⚠ TR 2SC1312S G, H
5-TR3	ET639437	TR 2SC945L Q, P
5-TR4,5	ET328868	TR 2SD1012-V G, H
5-TR6	ET308954	TR 2SC1844 E, F (E, B, S, V)
5-TR7	ET639437	TR 2SC945L Q, P
5-TR8,9	ET554657	TR 2SA733A P, Q
5-TR10	ET639437	TR 2SC945L Q, P
5-TR12,13	ET639437	TR 2SC945L Q, P
5-TR14	ET309353	⚠ TR 2SC2274 E, F
5-TR15,16	ET639437	TR 2SC945L Q, P
5-TR17,18	ET309353	⚠ TR 2SC2274 E, F
5-TR19to27	ET639437	TR 2SC945L Q, P
5-TR28	ET200506	TR 2SC2603 F
5-TR29	ET332245	TR 2SD794 P
5-TR30	ET639437	TR 2SC945L Q, P
5-TR31	ET328868	TR 2SD1012-V G, H
5-TR32,33	ET639437	TR 2SC945L Q, P
5-TR34	ET539133	TR 2SA733A P
5-TR35	ET310920	⚠ TR 2SC1846 R, S
5-TR36to39	ET639437	TR 2SC945L Q, P
5-TR40	ET666404	⚠ TR 2SD571 K,L
5-TR41	ET328868	TR 2SD1012-V G, H
5-TR42	ET639437	TR 2SC945L Q,P
5-D2	ED316143	D SILICON H 1S2473HS F10
5-D3 to 7	ED560913	D SILICON V 1S2473VE
5-D8	ED305704	D ZENER H HZ4 B2
5-D9	ED316143	D SILICON H 1S2473HS F10
5-D10to14	ED560913	D SILICON V 1S2473VE
5-D15	ED306109	D SILICON W03B 100/1.0A
5-D16	ED560913	D SILICON V 1S2473VE
5-D17	ED306014	D ZENER H HZ9 C3
5-D18,19	ED322982	D GERMA V 1S188FM-1-LR F07
5-D20	ED560913	D SILICON V 1S2473VE
5-D21	ED331626	D ZENER H HZ3 B2
5-D22	ED560913	D SILICON V 1S2473VE
5-VC1,2	EC315346	C S-FIX H ECV-1ZW50×32E 5.0-55
5-J1	EJ308986	PIN J 1784P1782 P 4P (U, J, C, A)
5-J1	EJ337381	JACK PLATE UD-0096 (E,B,S,V)
5-J2	EJ337622	PHONE J THROW HLJ0345-210 3P 2×3P
5-J2	EJ321328	PHONE J HLJ0345-010 2×3P (P)
5-J3	EJ337623	PHONE J 3P HLJ0315-023 6.3
5-J3	EJ330545	PHONE J 3P HLJ0315-020 6.3 (P)
5-SW1	ES328415	SW SOLENOID SWE018401 18V 04-2S
5-SW2	ES311975	SW SOLENOID R8150050 27V 10-2W
5-SW3	ES283072	SW SLIDE SSC22LP 2-02-02N (E, B, S, V)
5-VR1	EV315542	R S-FIX H D8 3P 103
5-VR2,3	EV315541	R S-FIX H D8 3P 503
5-VR4	EV315753	R S-FIX H D8 3P 203
5-VR5	EV316442	R S-FIX H D8 3P 102
5-VR6	EV315540	R S-FIX H D8 3P 502
5-VR7	EV313538	VR ROTARY 16P20×1B B103
5-RL1	EP328529	RELAY LEAD LAB2NS 2NO 12V
5-VL1	EO321336	COIL VARI 1 FE002 10mH
5-L1	EO669273	COIL FIX 2 FL5R200 18μH
5-T1	EO331625	COIL OSC1 0365-034 100KHz
5-FL3,4	EO315758	COIL TUN 1 100S-431 100KHz
5-R34	ER488024	⚠ R OMF H FS 1W 330J
5-R35	ER330977	⚠ R OMF H FS 2W 680J
5-C1	EC314990	C STY V SNP CQFS 101J 50DC
5-C3	EC314995	C STY V SNP CQFS 331J 50DC
5-C6	EC314995	C STY V SNP CQFS 331J 50 DC
5-C35	EC331631	C STY V SNP CQFS 821J 50DC
5-C48	EC313265	C STY V 152J 500DC
5-C60	EC321340	C PP V APS 8201G 100DC
5-C63	EC314990	C STY V SNP CQFS 101J 50DC
5-5	ZW263946	RV NYL40×050

6. SYS. CON. P.C BOARD BLOCK

REF. NO.	PARTS NO.	DESCRIPTION
6-1	BAT2040A050A	PC SYSCON (2) BLK GX-F66RC
6-IC1	EI336801	IC MB8841-564M
6-IC2	EI331658	IC MB8841-461M
6-IC3,4	EI331659	IC M54528P
6-IC5	EI319555	IC μPD4049C
6-IC6	EI331660	IC SN7417N
6-IC7	EI331661	IC SN7405N
6-TR1	ET324134	TR 2SA984K E,F
6-TR2	ET554657	TR 2SA733A P,Q
6-TR3to6	ET324134	TR 2SA984K E,F
6-TR7to9	ET554657	TR 2SA733A P,Q
6-TR10to12	ET635231	TR 2SC536NP F,G
6-TR13to36	ET554657	TR 2SA733A P,Q
6-D1 to 5	ED560913	D SILICON V 1S2473VE
6-D6	ED308952	D GERMA V 1K34A-LR F07
6-D7 to 10	ED560913	D SILICON V 1S2473VE
6-D11 to14	ED308952	D GERMA V 1K34A-LR F07
6-C6	EC363688	C MC V FM 101K 500DC
6-C7	EC285513	C MC V FM 220K 500DC
6-J1	EJ324276	DIN J TCS4680-01-111 P 8P

7. POWER SUPPLY P.C BOARD BLOCK

REF. NO.	PARTS NO.	DESCRIPTION
7-1	BAT2023A070A	PC POWER BLK GX-F66R(U)
7-2	BAT2023A070B	PC POWER BLK GX-F66R(J)
7-3	BAT2023A070C	PC POWER BLK GX-F66R(C)
7-4	BAT2023A070D	PC POWER BLK GX-F66R(A)
7-5	BAT2023A070E	PC POWER BLK GX-F66R(E)
7-6	BAT2023A070F	PC POWER BLK GX-F66R(B)
7-7	BAT2023A070G	PC POWER BLK GX-F66R(V)
7-8	BAT2023A070H	PC POWER BLK GX-F66R(S)
7-TR1	ET307349	⚠ TR 2SD794 P,Q
7-TR2	ET639437	⚠ TR 2SC945L Q,P
7-TR3	ET375603	⚠ TR 2SC1061 B,C
7-TR4	ET639437	⚠ TR 2SC945L Q,P
7-TR5	ET375603	⚠ TR 2SC1061 B,C
7-TR6	ET639437	⚠ TR 2SC945L Q,P
7-TR7	ET307349	⚠ TR 2SD794 P,Q
7-TR8	ET639437	⚠ TR 2SC945L Q,P
7-D1	ED319463	⚠ D SILICON 4B4B41 100/4.0A
7-D2	ED324013	D ZENER H HZ20 2
7-D3	ED319463	⚠ D SILICON 4B4B41 100/4.0A
7-D4	ED319167	D ZENER H HZ6 C3
7-D5	ED306109	⚠ D SILICON W03B 100/1.0A
7-D6	ED331667	D ZENER H HZ7 A1
7-J1	EJ310567	⚠ SOCKET INLET 0378PC-GS E 2P (B, S, V)
7-SW1	ES312234	⚠ SW PUSH SDL-1P 01-1 E (U, E, B, S, V)
7-SW1	ES312235	⚠ SW PUSH SDL-1P 01-1 J (J)
7-SW1	ES312238	⚠ SW PUSH SDL-1P 01-1 UC (C,A)
7-VS1	MZ283140	⚠ SOCKET SELECTOR X-17238 6P (U)
7-C1	EC320548	⚠ C CE V F 103Z 250AC (U, J, A)
7-C1	EC314688	⚠ C CE V FZ 103P 125AC(C)
7-C1	EC330307	⚠ C MMY V ECQUF 472M2 50AC (E, S, B, V)
7-C2	EC324023	C EC V CUT USM 222M 350DC

8. DRIVE P.C BOARD BLOCK

REF. NO.	PARTS NO.	DESCRIPTION
8-1	BAT2023A300A	PC DRIVE BLK GX-F66R
8-IC1	EI302681	IC SN7404N
8-IC2	EI201940	IC NJM4558S
8-TR1	ET307349	⚠ TR 2SD794 P,Q
8-TR2	ET324134	⚠ TR 2SA984K E, F
8-TR3,4	ET200985	TR 2SC2603 F,G
8-TR5	ET309353	TR 2SC2274 E,F
8-TR6	ET307349	⚠ TR 2SD794 P,Q
8-TR7	ET324134	⚠ TR 2SA984K E, F
8-TR8,9	ET200985	TR 2SC2603 F,G
8-TR10	ET309353	TR 2SC2274 E,F
8-TR11	ET324134	⚠ TR 2SA984K E, F
8-TR12,13	ET200985	TR 2SC2603 F,G
8-TR14	ET309353	TR 2SC2274 E,F
8-TR15	ET328868	TR 2SD1012-V G,H
8-TR16,17	ET328438	TR 2SB808-V F, G
8-TR18	ET328868	TR 2SD1012-V G,H
8-TR19to26	ET200985	⚠ TR 2SC2603 F,G
8-TR28to33	ET200985	TR 2SC2603 F,G
8-TR36	ET328868	TR 2SD1012-V G,H
8-TR37	ET200985	TR 2SC2603 F,G
8-D1	ED328486	D ZENER H HZ15 3
8-D2	ED560913	D SILICON V 1S2473VE
8-D3,4	ED306109	D SILICON W03B 100/1.0A
8-D5	ED560913	D SILICON V 1S2473VE
8-D6,7	ED306109	D SILICON W03B 100/1.0A
8-D8	ED560913	D SILICON V 1S2473VE
8-D9 to 11	ED306109	D SILICON W03B 100/1.0A
8-D12 to 17	ED560913	D SILICON V 1S2473VE
8-D18	ED306109	D SILICON W03B 100/1.0A
8-D19	ED316143	D SILICON H 1S2473HS F10
8-D20	ED560913	D SILICON V 1S2473VE
8-VR1	EV522652	R S-FIX V V8K1-1 3P 105
8-C14	EC314992	C STY V F05 CQF09 681J 50DC
8-C19	EC307793	C EC V F05 NP SM 220M 10DC

9. DOLBY (C) P.C BOARD BLOCK

REF. NO.	PARTS NO.	DESCRIPTION
9-1	BAT2040A070A	PC DOLBY(C) BLK GX-F66RC
9-IC1	EI336737	IC HA11226
9-IC2	EI336761	IC LA6458S
9-TR1 to 12	ET639437	TR 2SC945L Q,P
9-TR13	ET336735	TR 2SA733(A) P,K
9-D1	ED331227	D GERMA V 1K34A-UF SNP
9-D2	ED624903	D SILICON H 1S2473
9-D3	ED331227	D GERMA V 1K34A-UF SNP
9-D4,5	ED624903	D SILICON H 1S2473
9-D6	ED331227	D GERMA V 1K34A-UF SNP
9-SW1	ES332448	SW LEVER 01030123 2-10-03N
9-SW2	ES336779	SW LEVER 2-02-02S
9-SW3	ES328530	SW SOLENOID SWE018404 18V 04-2N
9-VR1	EV202110	VR ROTARY 16P11x0S A503 A503
9-VR2	EV315540	R S-FIX H D8 3P 502
9-VR3	EV322411	R S-FIX H D8 3P 202
9-VR4,5	EV315542	R S-FIX H D8 3P 103
9-FL1,2	EO336738	COIL TUN 1 102AK-004 19.8 KHz
9-FL3	ER328491	FILTER DB D07-003K 100KHz
9-FL4	ER328490	FILTER DB D07-001K 19KHz
9-C7	EC306980	C STY V F05 500 221J 50DC
9-C13	EC314990	C STY V SNP CQFS 101J 50DC

10. KEYBOARD (2) P.C BOARD BLOCK

REF. NO.	PARTS NO.	DESCRIPTION
		KEYBOARD (2) P.C BOARD BLOCK
10-1	BAT2040A060A	PC KEYBOARD (2) BLK GX-F66RC
10-IN1	EM331669	IND LE SL-1003 CHARACTER
10-D1 to 3	ED308953	D GERMA H 1K34A-LH SNP
10-D4 to 7	ED560913	D SILICON V 1S2473VE
10-SW1,2	ES324677	SW TACT KEC11904
10-SW3to14	ES323367	SW TACT KEC10001
10-SW15 to18	ES324677	SW TACT KEC11904
10-SW20to24	ES323367	SW TACT KEC10001
		MEMORY P.C BOARD BLOCK
10-SW1	ES201527	SW SLIDE SSS212 1-01-02N

11. LD P.C BOARD BLOCK

REF. NO.	PARTS NO.	DESCRIPTION
11-TR1,2	ET200985	TR 2SC2603 F,G
11-TR3	ET200558	TR 2SA1115 E,F

12. FILTER P.C BOARD BLOCK

REF. NO.	PARTS NO.	DESCRIPTION
12-L1,2	EO669273	COIL FIX 2 FL5R200 18μH

ASSEMBLY BLOCK

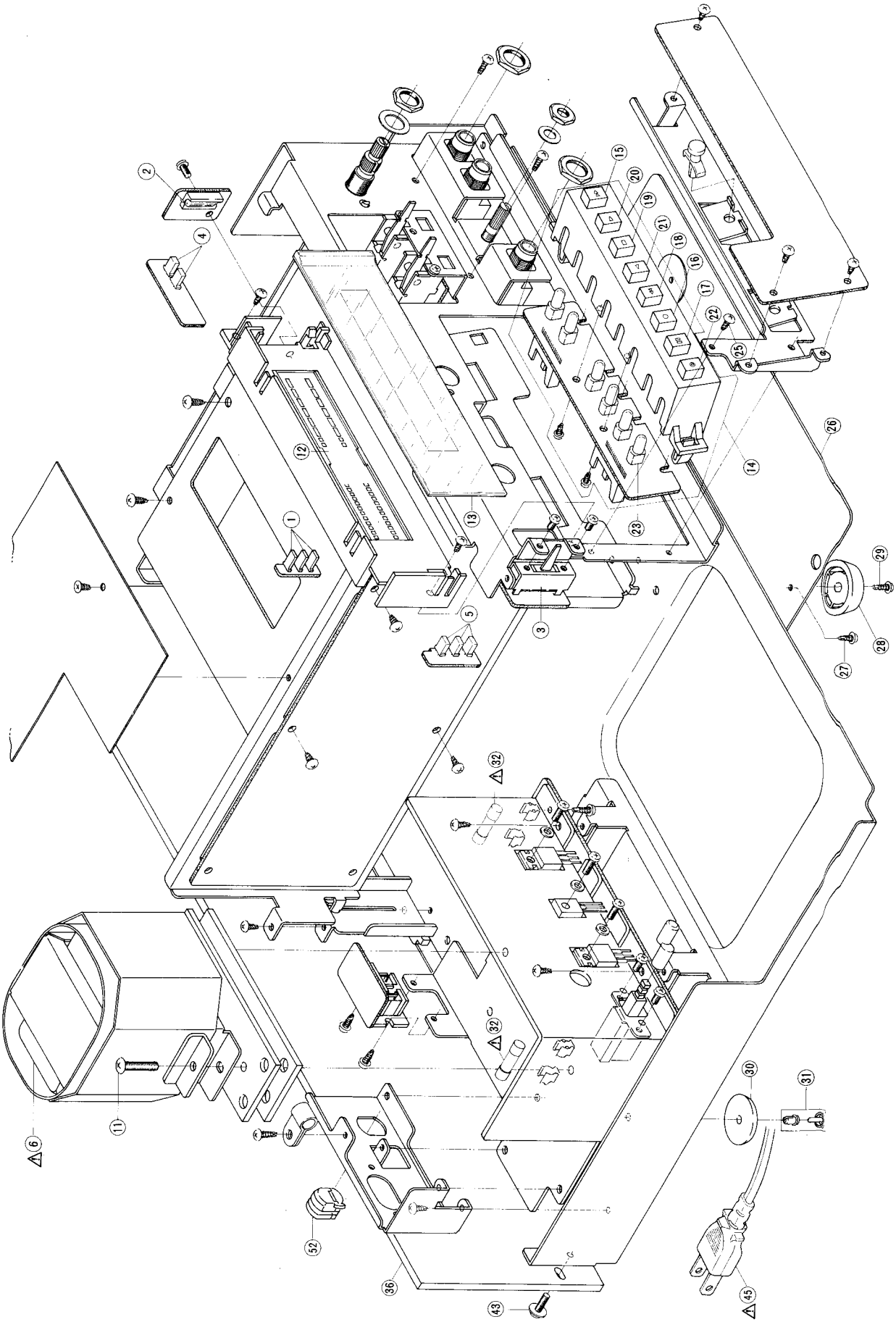

13. ASSEMBLY BLOCK

REF. NO.	PARTS NO.	DESCRIPTION
		TAPE LED P.C BOARD BLOCK
13-1	ED322773	D LED SLP-255D-01 GRN (D1,2,3)
		LAMP METER P.C BOARD BLOCK
13-2	EL304025	PL H LEAD 10V 110mA (IN1)
		SLIDE P.C BOARD BLOCK
13-3	ES337322	SW SLIDE 00230699 2-02-03N (SW1)
		DOLBY LED P.C BOARD BLOCK
13-4	ED322773	D LED SLP-255D-01 GRN (D1,2)
		REVERSE P.C BOARD BLOCK
13-5	ED322773	D LED SLP-255D-01 GRN (D1,2,3)
		POWER SUPPLY BLOCK
13-6	BT331662	⚠ TRANS POWER T2023-U
13-7x	BT331663	⚠ TRANS POWER T2023-J
13-8x	BT331665	⚠ TRANS POWER T2023-C,A (C,A,V)
13-9x	BT331664	⚠ TRANS POWER T2023-E
13-10x	BT331666	⚠ TRANS POWER T2023-B,S
13-11	ZS201033	ST PAN40x16STL CMT
		HOLDER METER BLOCK
13-12	ED331263	IND LE LT-1016 GRAPH (IN901)
		ASSEMBLY BLOCK
13-13	SZ331956	MASK METER
13-14	ES331670	SW OPERATION F66R 8P L
13-15	SK780000	KNOB OPERATION (FF)
13-16	SK780001	KNOB OPERATION (REC)
13-17	SK780002	KNOB OPERATION (PAUSE)
13-18	SK780004	KNOB OPERATION (REW)
13-19	SK780005	KNOB OPERATION (STOP)
13-20	SK780006	KNOB OPERATION (PLAY)
13-21	SK780007	KNOB OPERATION (REVERSE)
13-22	SK780008	KNOB OPERATION (REC MUTE)
13-23	EL300186	PL LEAD 8V 60mA
13-24x	TC780009	RUBBER SHEET SW ASSIST J-P5348-03
13-25	ZS463353	T2BR30x08STL BNI
13-26	SP331961	COVER BOTTOM PLATE
13-27	ZS325495	T2BR30x06STL CMT
13-28	SA202118	FOOT
13-29	ZS490228	T2BID30x08STL CMT
13-30	SA313811	RUBBER FOOT
13-31	ZW231030	RV NYL30x045 BL
13-32	EF306950	⚠ FUSE TSC A 250V 2A (F1,2) (U,J)
13-33x	EF306954	⚠ FUSE TSC 125V 2A (F1,2) (C,A)
13-34x	EF601301	⚠ FUSE SEMKO T 250V 2A (F1,2) (E,B,S,V)
13-35x	EF593706	⚠ FUSE SEMKO T 250V 0.50A (F3) (B)
13-36	SP332004R	PANEL REAR BOARD GX-F66RC(U)AS
13-37x	SP332004V	PANEL REAR BOARD GX-F66RC(J)AS
13-38x	SP332004T	PANEL REAR BOARD GX-F66RC(C)AS
13-39x	SP332004U	PANEL REAR BOARD GX-F66RC(A)AS
13-40x	SP332004S	PANEL REAR BOARD GX-F66RC(E)AS
13-41x	SP332004Q	PANEL REAR BOARD GX-F66RC(B,S) AS
13-42x	SP332004W	PANEL REAR BOARD GX-F66RC(V) AS
13-43	ZS332007	T2PAN30x10 STL CMT C080
13-44x	ZW305013	RV POP32 (A)
13-45	EW306428	⚠ AC CORD 2 CORES KP-205A,VFF J (U)
13-46x	EW306427	⚠ AC CORD 2 CORES KP-211, VFF J (J)
13-47x	EW305691	⚠ AC CORD 2 CORES KP-8, SPT-1 UC (C,A)
13-48x	EW201796	⚠ AC CORD 2 CORES KP-419C, LTCE-2F E (E)
13-49x	EW322400	⚠ AC CORD 2 CORES GTBS-2F/KS-15 B (B)
13-50x	EW322401	⚠ AC CORD 2 CORES KP-560/S-15 S (S)
13-51x	EW315767	⚠ AC CORD 2 CORES KP-419C/KS-15 E (V)
13-52	SZ631945	STRAIN RELIEF SR-4N-4 (U, J, C, A, E)

FINAL ASSEMBLY BLOCK

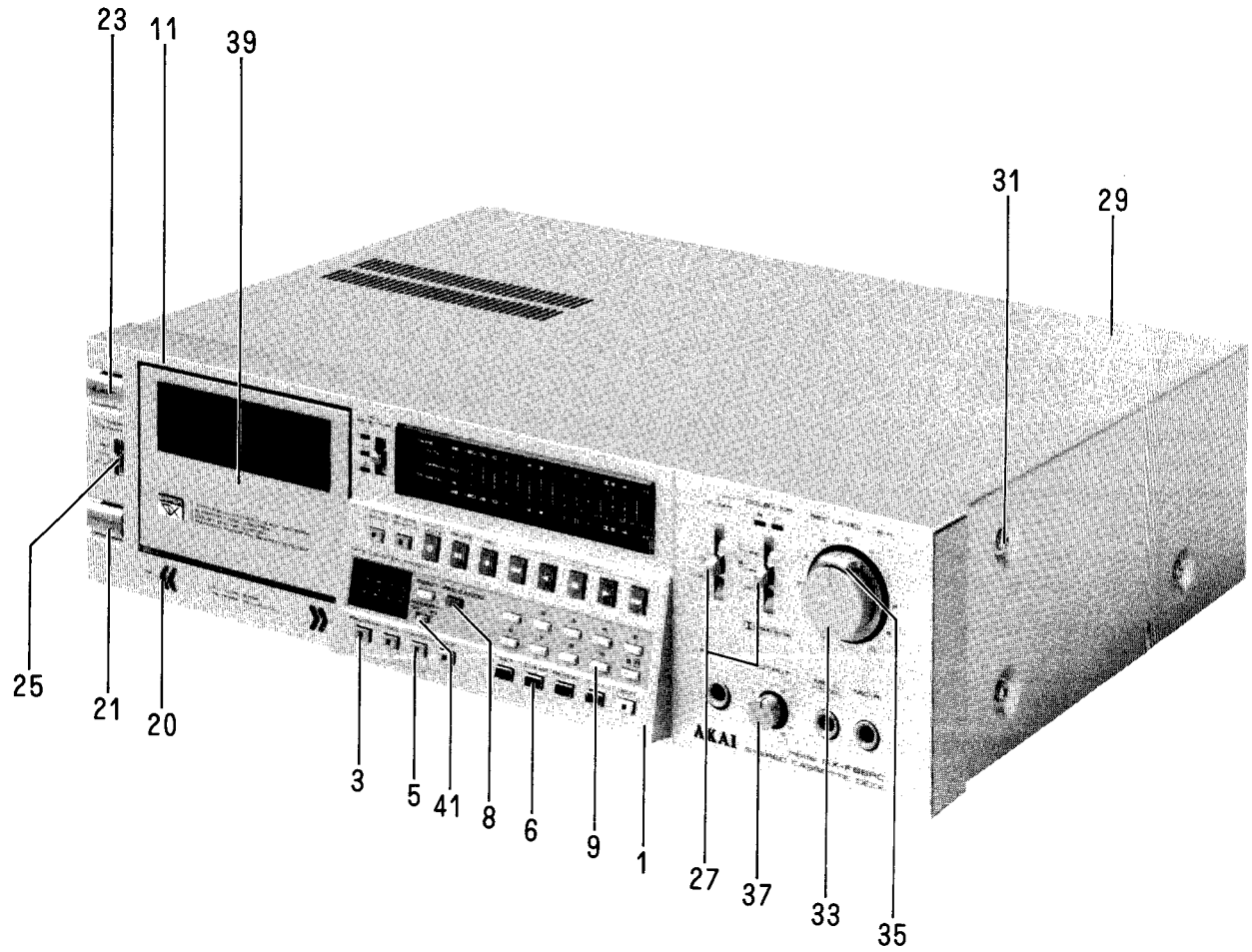

14. FINAL ASSEMBLY BLOCK

REF. NO.	PARTS NO.	DESCRIPTION
	SUB PANEL BLOCK	
14-1	BDT2040A030A	PANEL SUB BLK GX-F66RC
14-2x	BDT2040A030B	PANEL SUB BLK GX-F66RC-P
14-3	SK331981A	KNOB PUSH (A)
14-4x	SK331981C	KNOB PUSH (A)-P
14-5	SK331982	KNOB INDICATOR
14-6	SK331983A	KNOB PUSH (B)
14-7x	SK331983D	KNOB PUSH (B)-P
14-8	SK331984A	KNOB PUSH (C)-RED
14-9	SK331984C	KNOB PUSH (C)-GRAY
14-10x	SK331984D	KNOB PUSH (C)-P
	FRONT PANEL BLOCK	
14-11	BDB331974L	PANEL FRONT GX-F66RC(MONO) PART (U, J, C, A)
14-12x	BDB331974J	PANEL FRONT GX-F66RC PART (E, B, S, V)
14-13x	BDB331974M	PANEL FRONT GX-F66RC (MONO)-P PART (U, J, C, A)
14-14x	BDB331974K	PANEL FRONT GX-F66RC-P PART (E, B, S, V)
14-15x	TC331975A	LID ESCUTCHEON
14-16x	TC331975C	LID ESCUTCHEON-P
14-17x	SE331976A	ESCUTCHEON SIDE
14-18x	SE331976C	ESCUTCHEON SIDE-P
14-19x	ZS332008	PT PAN30x06STL CMT
14-20	SZ325789	DIRECTION LENS
14-21	SK317468A	KNOB PUSH (A)
14-22x	SK317468E	KNOB PUSH (A)-P
14-23	SK317468C	KNOB PUSH (B)
14-24x	SK317468F	KNOB PUSH (B)-P
	FINAL ASSEMBLY BLOCK	
14-25	SK328391	SLIDE KNOB
14-26x	SK336304	SLIDE KNOB-P
14-27	SK329033	LEVER KNOB (A)
14-28x	SK336307	LEVER KNOB-P
14-29	SP332003D	COVER UPPER (C)
14-30x	SP332003E	COVER UPPER (C)-P
14-31	ZS341963	XST BID40x06STL NI3
14-32x	ZS341964	XST BID40x06 STL BNI
14-33	SKB318794	KNOB DOUBLE (UPPER) PART GX-F90
14-34x	SKB604320	KNOB DOUBLE (UPPER) P PART
14-35	SK331998A	KNOB DOUBLE (LOWER)
14-36x	SK331998C	KNOB DOUBLE (LOWER)-P
14-37	SK317537	KNOB (B)
14-38x	SK336305	KNOB (B)-P
14-39	BDB332000E	LID PANEL (C) PART
14-40x	BDB332000F	LID PANEL (C)-P PART
14-41	SK331985A	KNOB MEMORY
14-42x	SK331985C	KNOB MEMORY-P
14-43x	BC330054	CASE WOOD (GX-F66RC-W)
14-44x	SA202118	FOOT (GX-F66RC-W)
14-45x	ZW326042	PW35x070x050STL CMT (GX-F66RC-W)
14-46x	ZS414268	TITRS35x10STL CMT (GX-F66RC-W)
14-47x	ZW381881	PW41x130x100STL CMT (GX-F66RC-W)
14-48x	ZS330057	ST BID40x22STL CMT (GX-F66RC-W)

INDEX

PARTS NO.	REF. NO.	PARTS NO.	REF. NO.	PARTS NO.	REF. NO.	PARTS NO.	REF. NO.	PARTS NO.	REF. NO.
BAT2023A070A	7-1	ED322773	13-4	ES330521	4-3	EW306427	13-46x	TCT2010D100A	4-12
BAT2023A070B	7-2	ED322773	13-5	ES330522	4-4	EW306428	13-45	TC314156	4-22
BAT2023A070C	7-3	ED322982	5-D18,19	ES331670	13-14	EW315767	13-51x	TC328351	4-50
BAT2023A070D	7-4	ED324013	7-D2	ES332448	9-SW1	EW322400	13-49x	TC328365	3-10
BAT2023A070E	7-5	ED328486	8-D1	ES336779	9-SW2	EW322401	13-50x	TC331975A	14-15x
BAT2023A070F	7-6	ED331227	9-D1	ES337322	13-3	HE325859	2-7	TC331975C	14-16x
BAT2023A070G	7-7	ED331227	9-D3	ET200506	5-TR28	HPH2206A010A	2-2	TC780009	13-24x
BAT2023A070H	7-8	ED331227	9-D6	ET200558	11-TR3	HZ313313	2-12	ZG310531	4-39
BAT2023A300A	8-1	ED331263	13-12	ET200985	8-TR3,4	HZ314069	4-38x	ZG310694	4-44
BAT2040A050A	6-1	ED331626	5-D21	ET200985	8-TR8,9	MB282104	3-16	ZG310695	4-45
BAT2040A060A	10-1	ED331667	7-D6	ET200985	8-TR12,13	MB282778	4-9	ZG312921	2-15
BAT2040A070A	9-1	ED560913	5-D3 to 7	ET200985	8-TR19to26	MB314317	4-33	ZG312921	4-41
BAT2040A080A	5-1	ED560913	5-D10to14	ET200985	8-TR28to33	MB314722	4-46	ZG312942	4-25
BAT2040A080B	5-2	ED560913	5-D16	ET200985	8-TR37	MH314340	2-21	ZG312944	4-17
BAT2040A080C	5-3	ED560913	5-D20	ET200985	11-TR1,2	MIB601782	4-31	ZG312946	2-22
BAT2040A080D	5-4	ED560913	5-D22	ET307349	7-TR1	MIB601783	4-32	ZG313314	2-13
BC330054	14-43x	ED560913	6-D1 to 5	ET307349	7-TR7	ML314151	4-14	ZG313316	2-8
BDB331974J	14-12x	ED560913	6-D7 to 10	ET307349	8-TR1	ML314337	4-40	ZG313874	2-9
BDB331974K	14-14x	ED560913	8-D12 to 17	ET307349	8-TR6	MR314339	4-42	ZG313960	2-16
BDB331974L	14-11	ED560913	8-D20	ET308954	5-TR1	MR328360	3-3	ZG314747	3-7
BDB331974M	14-13x	ED560913	8-D2	ET308954	5-TR6	MR328479	4-8	ZG314749	3-23
BDB332000E	14-39	ED560913	8-D5	ET309353	5-TR14	MS302191	4-20	ZG314876	3-22
BDB332000F	14-40x	ED560913	8-D8	ET309353	5-TR17,18	MT305793	3-15	ZG318083	4-37
BDT2040A030A	14-1	ED560913	10-D4 to 7	ET309353	8-TR5	MV269965	4-43	ZG318204	4-15
BDT2040A030B	14-2x	ED624903	9-D2	ET309353	8-TR10	MV328322	4-21	ZG321487	4-51
BHT2023A320A	2-1x	ED624903	9-D4,5	ET309353	8-TR14	MV357208	2-20	ZG321534	3-17
BI312117	3-9	EF306950	13-32	ET310920	5-TR35	MZ283140	7-VS1	ZG324329	4-49
BI312118	3-21	EF306954	13-33x	ET311977	4-2	SA202118	13-28	ZG328366	3-11
BMT2016A320A	3-1	EF593706	13-35x	ET324134	6-TR3 to 6	SA202118	14-44x	ZG330049	3-12
BMT2022A080A	4-6	EF601301	13-34x	ET324134	6-TR1	SA313811	13-30	ZG336064	4-47
BM314843	4-7	EI201940	8-IC2	ET324134	8-TR2	SE331976A	14-17x	ZG336651	4-27
BM328441	3-2	EI302681	8-IC1	ET324134	8-TR7	SE331976C	14-18x	ZG402895	2-19
BR328424	3-13	EI311959	5-IC2	ET324134	8-TR11	SKB318794	14-33	ZG402895	2-5
BT331662	13-6	EI319555	6-IC5	ET328438	8-TR16,17	SKB604320	14-34x	ZS201033	13-11
BT331663	13-7x	EI331658	6-IC2	ET328868	5-TR41	SK317468A	14-21	ZS302318	4-35
BT331664	13-9x	EI331659	6-IC3,4	ET328868	5-TR4,5	SK317468C	14-23	ZS321338	4-10
BT331665	13-8x	EI331660	6-IC6	ET328868	5-TR31	SK317468E	14-22x	ZS325495	13-27
BT331666	13-10x	EI331661	6-IC7	ET328868	8-TR15	SK317468F	14-24x	ZS330057	14-48x
BZT2010A070A	2-14	EI336737	9-IC1	ET328868	8-TR18	SK317537	14-37	ZS332007	13-43
BZT2016A330A	3-19	EI336761	9-IC2	ET328868	8-TR36	SK328391	14-25	ZS332008	14-19x
BZT2016A330A	4-36	EI336801	6-IC1	ET332245	5-TR29	SK329033	14-27	ZS341963	14-31
BZT2021A200A	4-48	EJ308986	5-J1	ET336735	9-TR13	SK331981A	14-3	ZS341964	14-32x
BZT2022A260A	3-18	EJ310567	7-J1	ET375603	7-TR3	SK331981C	14-4x	ZS414268	14-46x
BZT2023A310A	4-13	EJ321328	5-J2	ET375603	7-TR5	SK331982	14-5	ZS417137	3-24
EC285513	6-C7	EJ324276	6-J1	ET539133	5-TR34	SK331983A	14-6	ZS430413	3-6
EC306980	9-C7	EJ330545	5-J3	ET554657	5-TR8,9	SK331983D	14-7x	ZS432843	4-56
EC307793	8-C19	EJ337381	5-J1	ET554657	6-TR2	SK331984A	14-8	ZS460438	4-23
EC313265	5-C48	EJ337622	5-J2	ET554657	6-TR7 to 9	SK331984C	14-9	ZS463353	13-25
EC314688	7-C1	EJ337623	5-J3	ET554657	6-TR13to36	SK331984D	14-10x	ZS465298	2-11
EC314990	5-C1	EL300186	13-23	ET603257	5-TR2	SK331985A	14-41	ZS477876	2-3
EC314990	5-C63	EL304025	13-2	ET635231	6-TR10to12	SK331985C	14-42x	ZS479474	3-20
EC314990	9-C13	EL309960	4-52	ET639437	5-TR36to39	SK331998A	14-35	ZS490228	13-29
EC314992	8-C14	EL317599	4-1	ET639437	5-TR19to27	SK331998C	14-36x	ZS536488	2-4
EC314995	5-C3	EM331669	10-IN1	ET639437	5-TR42	SK336304	14-26x	ZS592378	2-6
EC314995	5-C6	EO315758	5-FL3,4	ET639437	5-TR3	SK336305	14-38x	ZW231030	13-31
EC315346	5-VC1,2	EO321336	5-VL1	ET639437	5-TR7	SK336307	14-28x	ZW263946	5-5
EC320548	7-C1	EO331625	5-T1	ET639437	5-TR10	SK780000	13-15	ZW270088	2-24
EC321340	5-C60	EO336738	9-FL1,2	ET639437	5-TR12,13	SK780001	13-16	ZW270088	2-18
EC324023	7-C2	EO669273	5-L1	ET639437	5-TR15,16	SK780002	13-17	ZW270088	3-8
EC330307	7-C1	EO669273	12-L1,2	ET639437	5-TR30	SK780004	13-18	ZW270088	4-28
EC331631	5-C35	EP318644	4-5	ET639437	5-TR32,33	SK780005	13-19	ZW270101	4-16
EC363688	6-C6	EP318645	3-4	ET639437	7-TR2	SK780006	13-20	ZW270101	4-29
ED305704	5-D8	EP328529	5-RL1	ET639437	7-TR4	SK780007	13-21	ZW273734	2-10
ED306014	5-D17	ER328490	9-FL4	ET639437	7-TR6	SK780008	13-22	ZW305013	13-44x
ED306109	5-D15	ER328491	9-FL3	ET639437	7-TR8	SP331961	13-26	ZW312121	4-19
ED306109	7-D5	ER330977	5-R35	ET639437	9-TR1to12	SP332003D	14-29	ZW321437	4-26
ED306109	8-D18	ER488024	5-R34	ET666404	5-TR40	SP332003E	14-30x	ZW326042	14-45x
ED306109	8-D3,4	ES201527	10-SW1	EV202110	9-VR1	SP332004Q	13-41x	ZW238682	2-23
ED306109	8-D6,7	ES283072	5-SW3	EV313538	5-VR7	SP332004R	13-36	ZW330073	3-14
ED306109	8-D9to11	ES311975	5-SW2	EV315540	5-VR6	SP332004S	13-40x	ZW332843	4-55
ED308952	6-D6	ES312234	7-SW1	EV315540	9-VR2	SP332004T	13-38x	ZW381881	14-47x
ED308952	6-D11to14	ES312235	7-SW1	EV315541	5-VR2,3	SP332004U	13-39x	ZW438928	4-24
ED308953	10-D1to3	ES312238	7-SW1	EV315542	5-VR1	SP332004V	13-37x	ZW516993	3-5
ED316143	5-D2	ES323367	10-SW3 to14	EV315542	9-VR4,5	SP332004W	13-42x	ZW556828	2-17
ED316143	5-D9	ES323367	10-SW20to24	EV315753	5-VR4	SZB314713A	4-53	ZW649991	4-30
ED316143	8-D19	ES324677	10-SW1,2	EV316442	5-VR5	SZB314713B	4-54x	ZW694798	4-34
ED319167	7-D4	ES324677	10-SW15to18	EV322411	9-VR3	SZ325789	14-20		
ED319463	7-D1	ES328415	5-SW1	EV522652	8-VR1	SZ331956	13-13		
ED319463	7-D3	ES328530	9-SW3	EW201796	13-48x	SZ631945	13-52		
ED322773	13-1	ES330463	4-18	EW305691	13-47x	TCT2010D090A	4-11		

SECTION 3

SCHEMATIC DIAGRAM

1. SCHEMATIC DIAGRAM OF ICs
2. GX-F66RC No. 2-1 1640216A POWER & SYSCON SCHEMATIC DIAGRAM
3. GX-F66RC No. 2-2 1640217A AMP SCHEMATIC DIAGRAM

HA12028

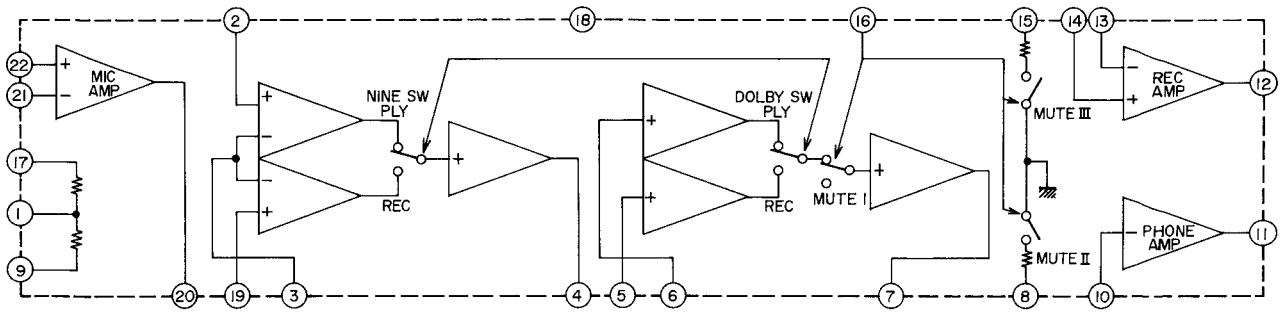

M54528P

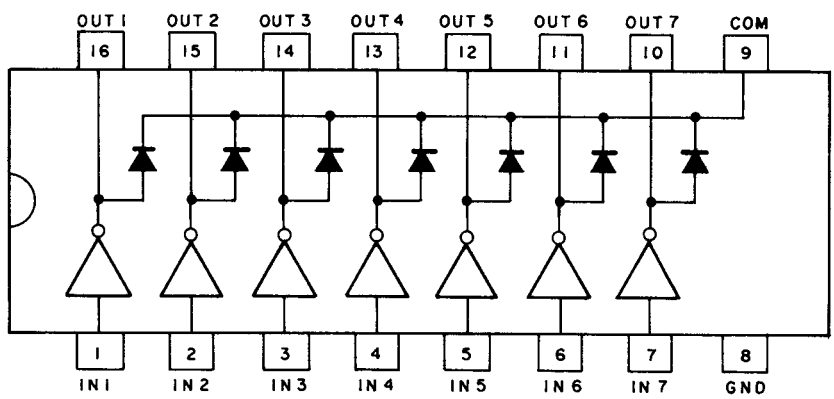

MB8841-564M/461M

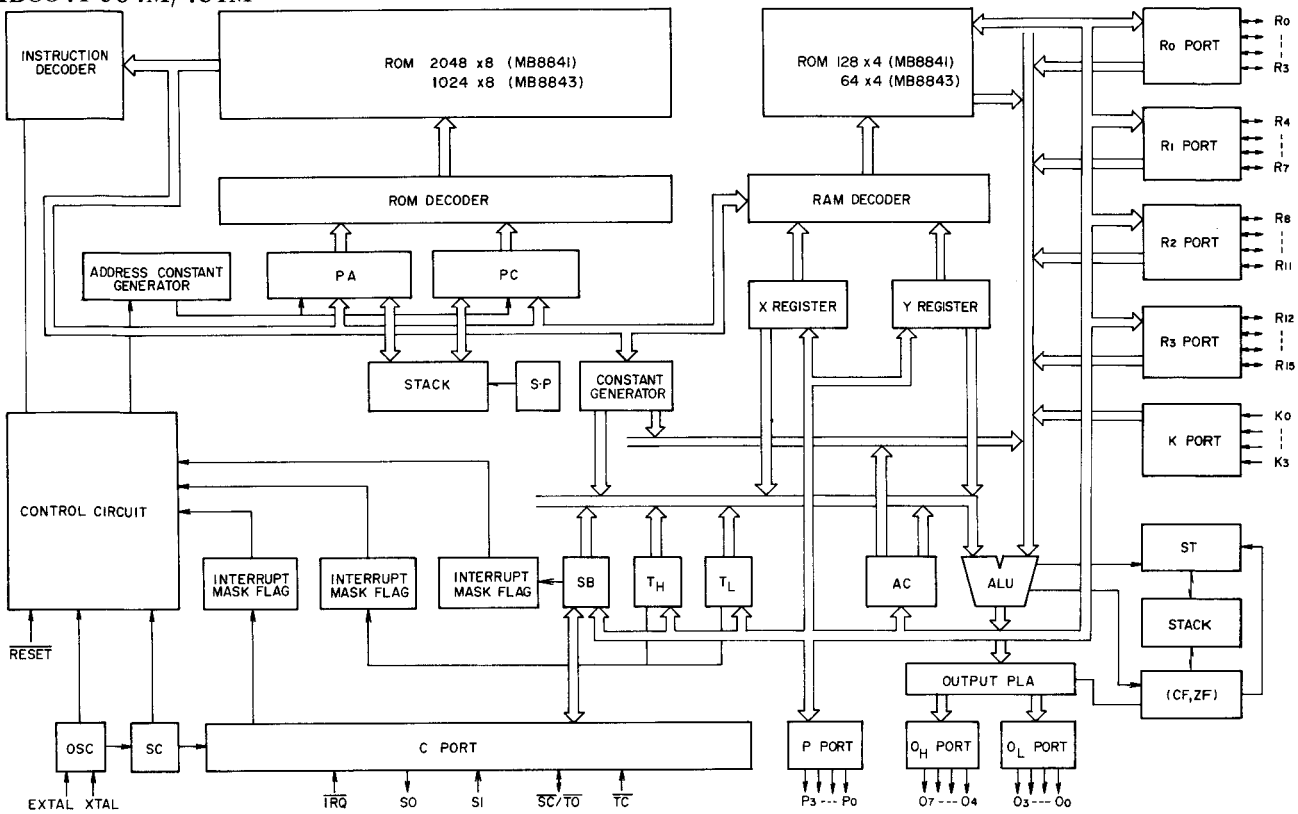

NJM4558S/LA6458S

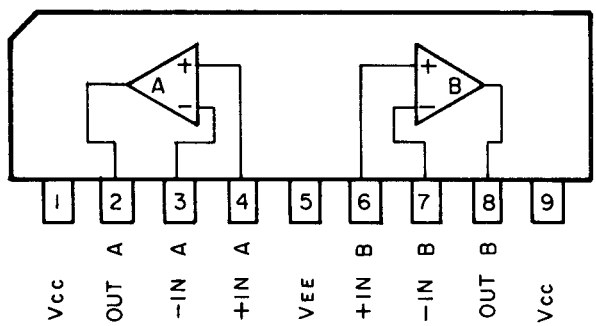

SN7405

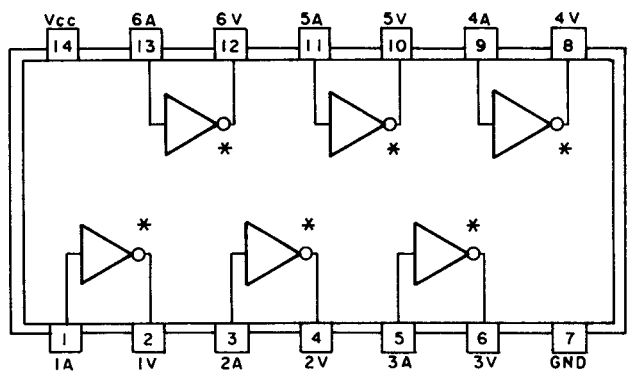

* OPEN COLLECTOR

SN7417N

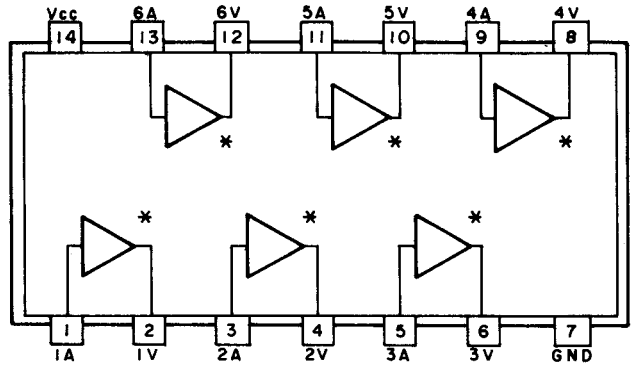

* OPEN COLLECTOR

μPD4049C

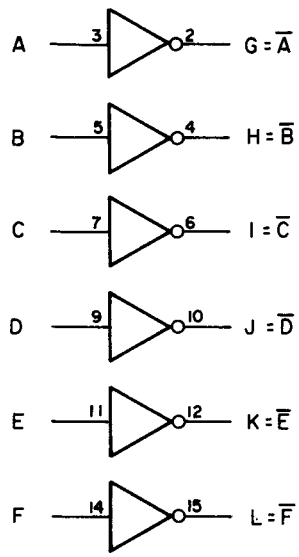

Vcc 1

Vss 8

NC = 13
NC = 16

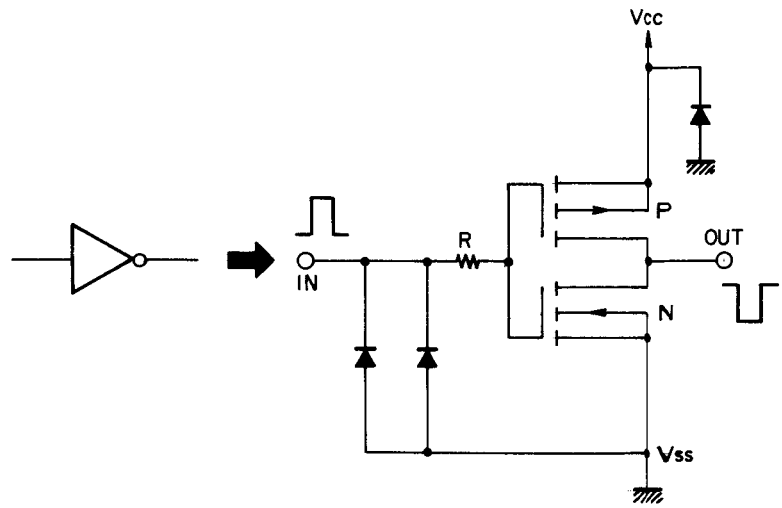

GX-F66RC

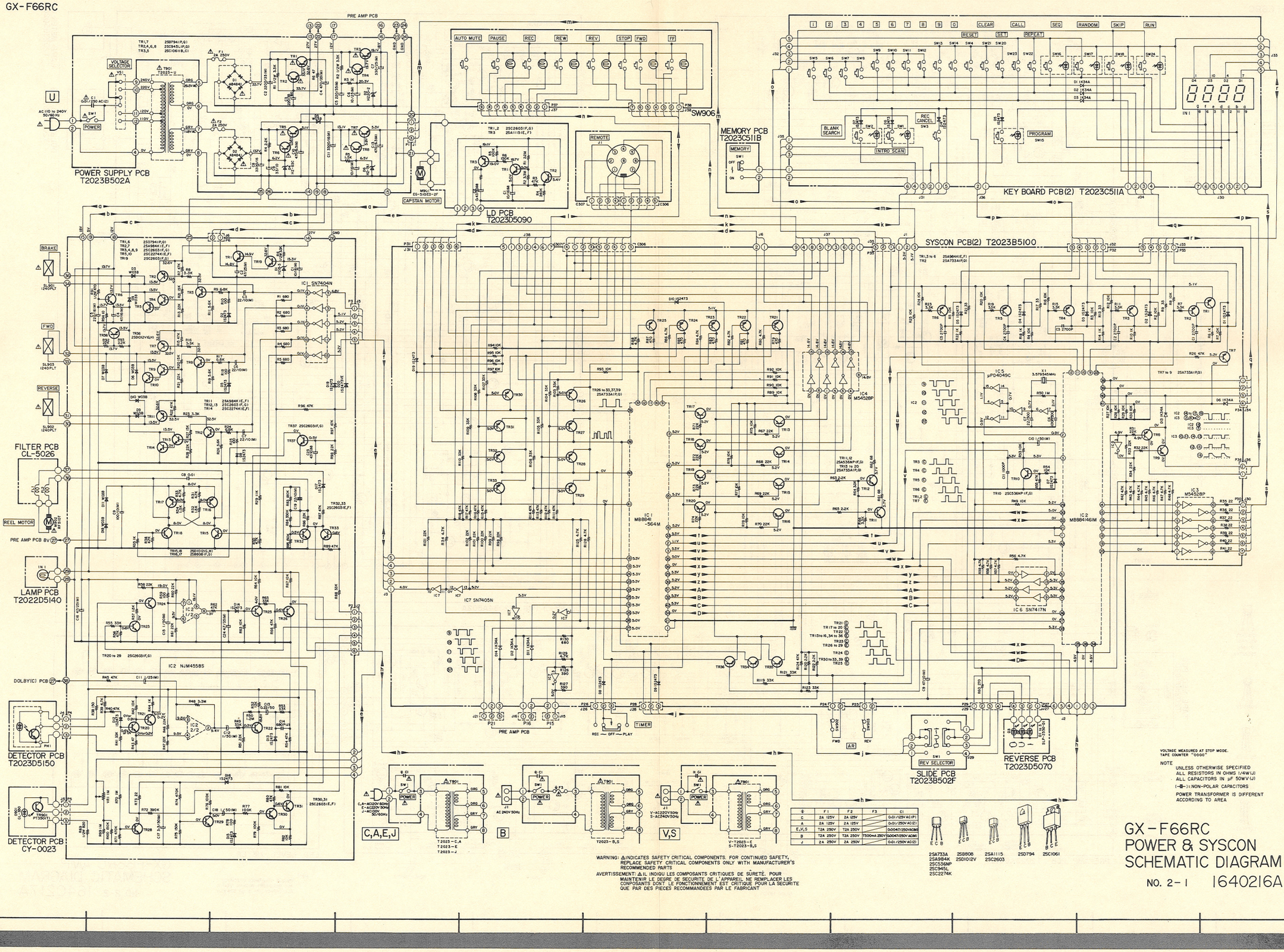

VOLTAGE MEASURES AT STOP MODE.
TAPE COUNTER "0000"

NOTE
UNLESS OTHERWISE SPECIFIED
ALL RESISTORS IN OHMS 1/4W(J)
ALL CAPACITORS IN μF 50WV(J)
(—■—)< NON-POLAR CAPACITORS
POWER TRANSFORMER IS DIFFERENT ACCORDING TO AREA

※	F1	F2	F3	C1
C	2A 125V	2A 125V		0.01/125V AC(P)
A	2A 125V	2A 125V		0.01/250V AC(E)
E,V,S	T2A 250V	T2A 250V		0.0047/250V AC(M)
B	T2A 250V	T2A 250V	T500mA 250V	0.0047/250V AC(M)
J	2A 250V	2A 250V		0.01/250V AC(E)

2SA733A 2SA984K 2SC536NP 2SC945L 2SC2274K — 2SB808 2SD1012V — 2SA1115 2SC2603 — 2SD794 — 2SC1061

WARNING: ⚠ INDICATES SAFETY CRITICAL COMPONENTS. FOR CONTINUED SAFETY, REPLACE SAFETY CRITICAL COMPONENTS ONLY WITH MANUFACTURER'S RECOMMENDED PARTS
AVERTISSEMENT: ⚠ IL INDIQU LES COMPOSANTS CRITIQUES DE SÛRETÉ. POUR MAINTENIR LE DEGRÉ DE SECURITÉ DE L'APPAREIL NE REMPLACER LES CONPOSANTS DONT LE FONCTIONNEMENT EST CRITIQUE POUR LA SECURITÉ QUE PAR DES PIECES RECOMMANDEES PAR LE FABRICANT

GX-F66RC POWER & SYSCON SCHEMATIC DIAGRAM

NO. 2-1 1640216A

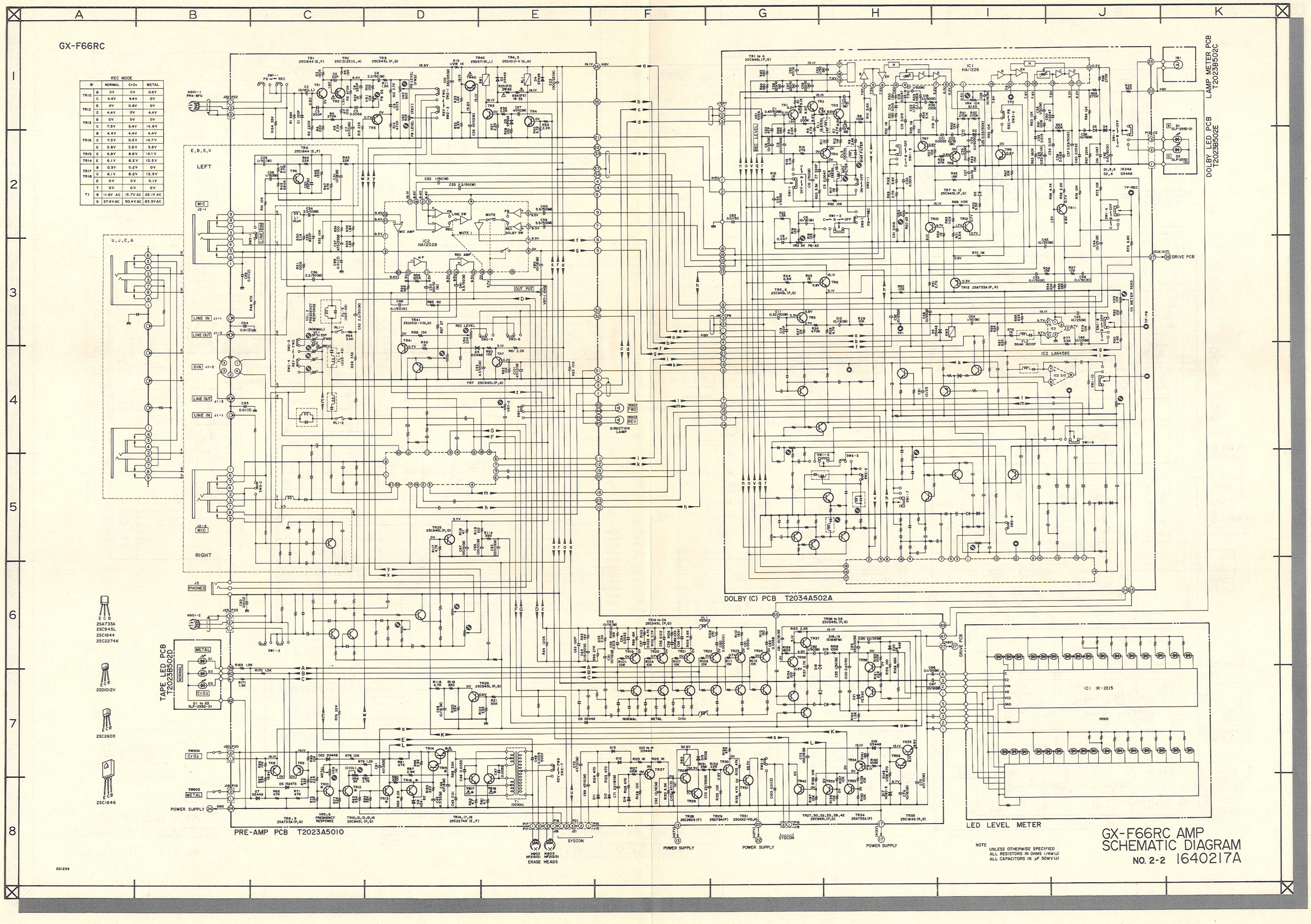

REC MODE

*		NORMAL	CrO₂	METAL
TR10	B	0V	0V	0.6V
	C	4.4V	4.4V	0V
TR12	B	0V	0.6V	0V
	C	4.4V	0V	4.4V
TR13	B	0V	0V	0V
	C	7.3V	9.4V	14.8V
TR16	B	4.4V	4.4V	4.4V
	C	7.3V	9.3V	14.7V
	E	3.8V	3.8V	3.8V
TR15	E	6.8V	8.8V	14.1V
TR14	E	6.1V	8.2V	13.5V
TR17 TR18	B	0.3V	0.2V	0V
	C	6.1V	8.2V	13.5V
	E	0V	0V	0.1V
T1	7	0V	0V	0V
	8	11.6V AC	15.7V AC	26.1V AC
	9	37.9V AC	50.4V AC	83.3V AC

AKAI ELECTRIC CO., LTD.

12-14, 2-Chome, Higashi-Kojiya, Ohta-Ku, Tokyo, Japan

TEL: Tokyo (742) 5111 CABLE: HIFIAKAI TOKYO TELEX: J26261

Printed No. 1640402-4616K1 Printed Date: February 2, 1982

Printed in Japan